ROTAX® KARTING

BRP

Ersatzteilliste
Spare parts list

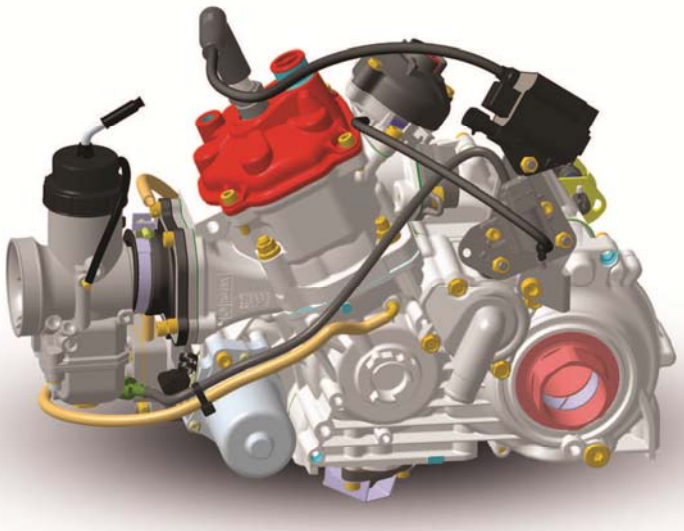

für ROTAX®-Motoren Type / *for ROTAX®-engines type*

125 MAX DD2 evo

Produktion / ***Production***: 2016
Ausführung / ***Configuration***: . 36.0125.210 125 MAX DD2 evo
Nr. / ***NO.***: 1675
Ausgabe / ***Edition***: 08 2016

BRP-Rotax GmbH & Co KG | Rotaxstrasse 1 | 4623 Gunskirchen, Austria | T: +43 7246 601 0 | F: +43 7246 637 0
www.rotax.com | www.rotax-kart.com

BRP-Rotax empfiehlt Produkte der Marken:

BRP-Rotax recommends products of following brands:

INHALTSVERZEICHNIS
TABLE OF CONTENTS

KAPITEL/CHAPTER	SEITE/PAGE
1. KURBELGEHÄUSE, KURBELWELLE, KOLBEN, GETRIEBE, E-STARTER TRIEB CRANKCASE, CRANKSHAFT, PISTON, GEARBOX, E-STARTER DRIVE	5
2. ZYLINDER CYLINDER	11
3. RAVE RAVE	15
4. FLIEHKRAFTKUPPLUNG, AUSGLEICHSTRIEB, PRIMÄRTRIEB, KUPPLUNGSDECKEL CENTRIFUGAL CLUTCH, BALANCE SHAFT DRIVER, PRIMARY DRIVE, CLUTCH COVER	19
5. ABTRIEB, SCHALTUNG, SCHALTSEILZÜGE, LENKRADNABE POWER TAKE OFF, SHIFTING, SHIFTING BOWDEN CABLES, STEERING WHEEL HUB	23
6. ZÜNDANLAGE, E-STARTER, BATTERIE, BATTERIEDECKEL, LADEGERÄT, KABELBAUM IGNITION UNIT, E-STARTER, BATTERY, BATTERY COVER, BATTERY CHARGER, CABLE HARNESS	27
7. BATTERIE, LADEGERÄTE BATTERY, BATTERY CHARGER	31
8. KABELBAUM WIRING HARNESS	35
9. VERGASER, DICHTUNGSSATZ (VERGASER), KRAFTSTOFFPUMPE, REPARATURSATZ (KRAFTSTOFFPUMPE), KRAFSTOFFSCHLAUCH, GASSEILZUG CARBURETTOR, GASKET SET (CARBURETTOR), FUEL PUMP, REPAIR SET (FUEL PUMP), FUEL TUBE, CABLE BOWDEN	37
10. KÜHLER, KÜHLERBEFESTIGUNG RADIATOR, RADIATOR MOUNTING	43
11. ANSAUGGERÄUSCHDÄMPFER, DÄMPFERFILTER INTAKE SILENCER, FILTER ELEMENT	45
12. AUSPUFFANLAGE EXHAUST SYSTEM	47
13. EVO AUFRÜSTSATZ ZÜNDUNG EVO UPGRADE KIT IGNITION	51
14. EVO AUFRUESTSATZ E-AUSPUFFSCHIEBER EVO UPGRADE KIT E-EXHAUST VALVE	53
15. WERKZEUGE REPAIR TOOLS	57
16. PRÜFWERKZEUGE SCRUTINEERING TOOLS	61
17. HINTERREIFEN SICHERHEITS SYSTEM REAR TIRE PROTECTION SYSTEM	63
18. ZUBEHÖR ACCESSORIES	65

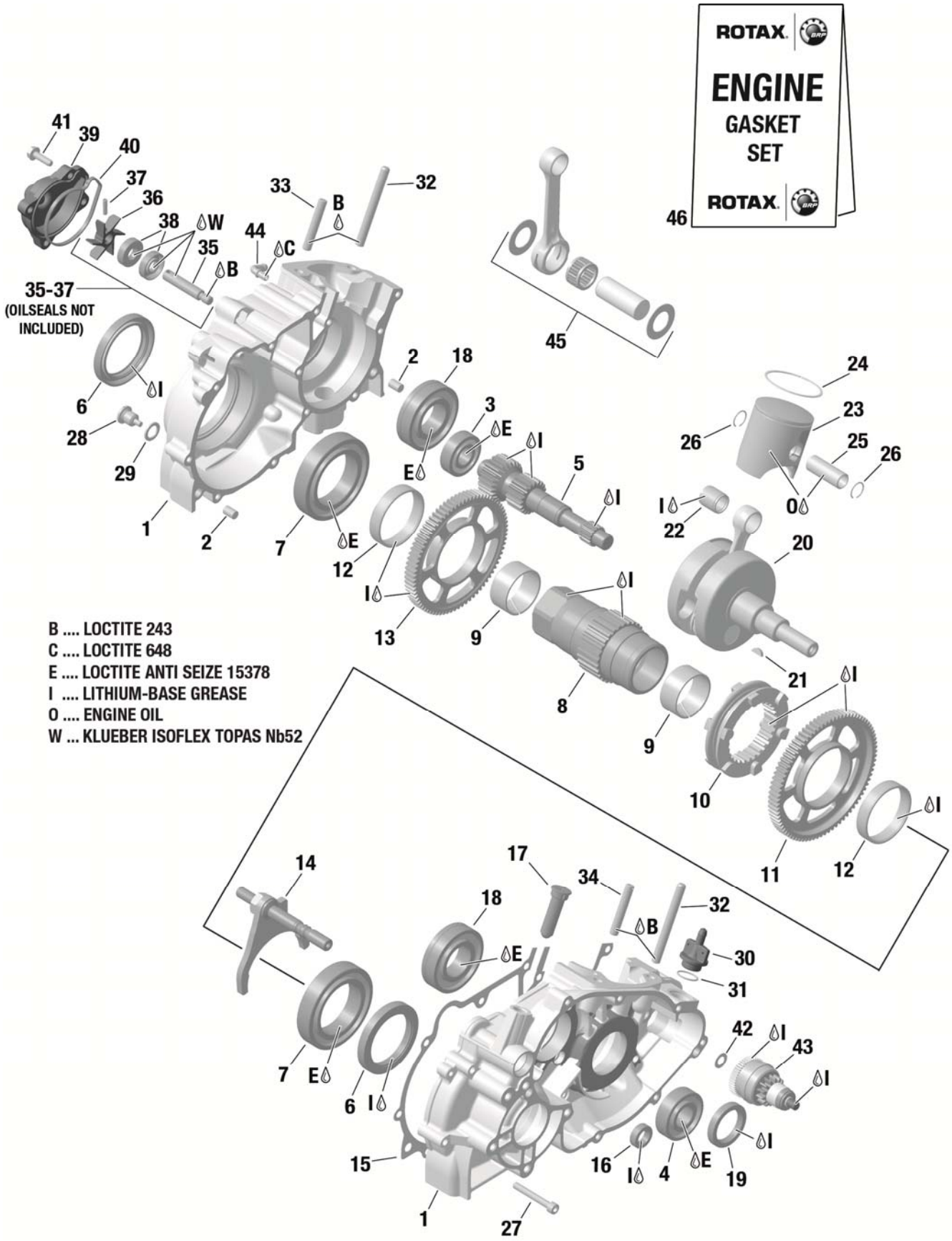
ROTAX
ENGINE
GASKET
SET
ROTAX
35-37
(OILSEALS NOT
INCLUDED)
B .... LOCTITE 243
C .... LOCTITE 648
E .... LOCTITE ANTI SEIZE 15378
I .... LITHIUM-BASE GREASE
O .... ENGINE OIL
W ... KLUEBER ISOFLEX TOPAS Nb52

Chapter 1

KURBELGEHÄUSE, KURBELWELLE, KOLBEN, GETRIEBE, E-STARTER TRIEB
CRANKCASE, CRANKSHAFT, PISTON, GEARBOX, E-STARTER DRIVE

BILD-NR. ILL.NO.	TEILE-NR. PART-NO.	BEZEICHNUNG DESCRIPTION	STÜCK QTY.	BARCODE BAR CODE
1-2	684 234	GEHAEUSE KPL., SCHWARZ CRANKCASE ASSY., BLACK COATED ***Für altes und neues Wippschaltsystem*** ***For old and new paddle shift system***	1	
2	632 010	ZYLINDERROLLE 8X12 DIN 5402 PIN 8X12 DIN 5402	2	
3	932 030	RK-LAGER 6203 C3 BALL BEARING 62O3 C3, 17-40-12	1	
4	932 434	RK-LAGER 6204 - E - TVH C3 BALL BEARING 62O4 C3, 20-47-14	1	
5	620 182	VORGELEGEWELLE 24/19 Z PRIMARY SHAFT 24/19 T	1	
6	630 500	WD-RING ASL 50X68X8 NBR OIL SEAL ASL 50X68X8 NBR	2	
7	432 330	RK-LAGER 6010 C3 B. BEARING 6010 C3 50-80-16	2	
8	620 164	HOHLWELLE HOLLOW SHAFT	1	
9	233 120	LAGERHUELSE 40X44X20 PLAIN BEARING 40X44X20	2	
10	257 362	SCHALTMUFFE SHIFTING SLEEVE	1	
11	635 702	LOSRAD 81 Z IDLE GEAR 81 T *1. Gang* *1. Gear*	1	
12	632 666	NADELKAEFIG K 52X57X12 NEEDLE BEARING K 52X57X12	2	
13	635 712	LOSRAD 77 Z IDLE GEAR 77 T *2. Gang* *2. Gear*	1	

14	257 405	SCHALTGABEL KPL. SHIFT FORK ASSY.	1
15	630 522	DICHTUNG GASKET	1
16	250 455	WD-RING AS 12X22X7 NBR OIL SEAL 12X22X7	1
17	257 422	SCHALTSTANGENARRETIERUNG SHIFT RAIL DETENT PIN	1
18	832 533	RK-LAGER 6206 TVH C4M BALL BEARING 6206 TVH C4M 30-62-16	2
19	930 695	WD-RING AS 30X42X7/7,5 NBR OIL-SEAL AS 30X42X7/7,5 NBR	1
20 - 21	685 019	KURBELWELLE KPL. CRANKSHAFT ASSY. *Inkl. Scheibenfeder* *Incl. Woddruff key*	1
21	246 015	SCHEIBENFEDER 3X5 DIN 6888 WOODRUFF KEY 3X5	1
22	932 027	KOLBENBOLZENKAEFIG K 15X19X20 NEEDLE CAGE K 15X19X20	1
23-24	295 501	KOLBEN KPL. 53,95 MM PISTON ASSY. 53,95 MM *Standard*	1
23-24	295 502	KOLBEN KPL. 53,96 MM PISTON ASSY. 53,96 MM *Standard*	1
23-24	295 503	KOLBEN KPL. 53,97 MM PISTON ASSY. 53,97 MM *Standard*	1
23-24	295 504	KOLBEN KPL. 53,98 MM PISTON ASSY. 53,98 MM *Übermass* *Oversize*	1
23-24	295 505	KOLBEN KPL. 53,99 MM PISTON ASSY. 53,99 MM *Übermass* *Oversize*	1

24	215 548	R-RING IS2-54/49,4X1 RECTANGULAR RING IS2-54/49,4X1	1
25	216 135	KOLBENBOLZEN 15X10/12X45,6 PISTON PIN 15X10/12,5X45,6	1
26	945 635	NULLHAKENRING 15 CIRCLIP 15 *Nur einmal verwenden* *Use only once*	2
27	241 821	ZYL.SCHRAUBE M6X45 DIN 912 ALLEN SCREW M6X45 DIN 912 *Anzugsdrehmoment 10 NM* *Tightening torque 10 NM*	12
28	241 782	MAGNETSCHRAUBE M12X1,5 MAGNETIC DRAIN PLUG M12X1,5 *Anzugsdrehmoment 20 NM* *Tightening torque 20 NM*	1
29	250 640	DICHTRING A 12X18 DIN 7603 SEALING RING A 12X18-CU DIN 7603	1
30	241 925	ENTLUEFTUNGSSCHRAUBE M18X1,5 AIR VENT SCREW M18X1,5	1
31	250 890	O-RING DIN 3771-17X1,5-N, NBR 70 O-RING DIN 3771-17X1,5-N	1
32	940 786	STIFTSCHRAUBE M8X57/20 STUD M8X57/20 *Anzugsdrehmoment 5 NM* *Tightening torque 5 NM*	2
33	241 381	STIFTSCHRAUBE M8X28/20 STUD M8X28/20 *Anzugsdrehmoment 5 NM* *Tightening torque 5 NM*	1
34	241 386	STIFTSCHRAUBE M8X28/20 STUD M8X28/20 *Anzugsdrehmoment 5 NM* *Tightening torque 5 NM* *Mit Bohrung, zum Versiegeln des Motors* *With hole, for sealing the engine*	1
35-37	620 275	WASSERPUMPENWELLE KPL. WATERPUMP SHAFT ASSY. *WD-Ringe 230195 nicht enthalten* *Oil seals 230195 not included*	1

35	-xxx-	WASSERPUMPENWELLE PUMP SHAFT *Anzugsdrehmoment 4 NM* *Tightening torque 4 NM* *ACHTUNG: Linksgewinde* *ATTENTION: Left hand thread*	1	
36	-xxx-	LAUFRAD IMPELLER	1	
37	229 200	SPANNSTIFT 4X16 DOWEL 4X16	1	
38	230 195	WD-RING A 10X26X7 NBR OIL SEAL A 10X26X7 NBR	2	
39	222 720	WASSERPUMPENGEHAEUSE WATER PUMP HOUSING	1	
40	630 770	SCHLAUCHRING 61,5X1,5X3,5 RUBBER RING 61,5X1,5X3,5	1	
41	941 250	TAPTITE-SCHRAUBE M6X20 TAPTITE-SCREW M6X20 *Anzugsdrehmoment 7 NM* *Tightening torque 7 NM*	4	
42	227 945	ANLAUFSCHEIBE 8,5/15/0,5 THRUST WASHER 8,5/15/0,5	1	
43	294 812	STARTERGETRIEBE KPL. STARTER REDUCTION GEAR ASSY.	1	
44	924 523	IMPULSKRUEMMER MPULSE FITTING	1	
45	685 016	KURBELWELLESATZ CRANKSHAFT REPAIR KIT	1	
46	296 162	DICHTUNGSSATZ GASKET SET ASSY. *WD-Ring (KAP. 03, POS.8) und Auspuffdichtung (Kap. 02, Pos. 31) nicht enthalten* *Oil seal (Chap. 03, Pos. 8) and exhaust gasket (Chap. 02, Pos. 31) not included*	1	
E	297 434	LOCTITE ANTI SEIZE 15378 50 ML.	AS REQ.	
I	897 330	LITHIUM-BASE GREASE, 250 GR.,	AS REQ.	

B	897 651	LOCTITE 243 BLUE, 10 CC.	AS REQ.
C	899 788	LOCTITE 648 GREEN, 5 GR.	AS REQ.
W	899 564	KLUEBER ISOFLEX TOPAS NB 52 0,4 KG	AS REQ.

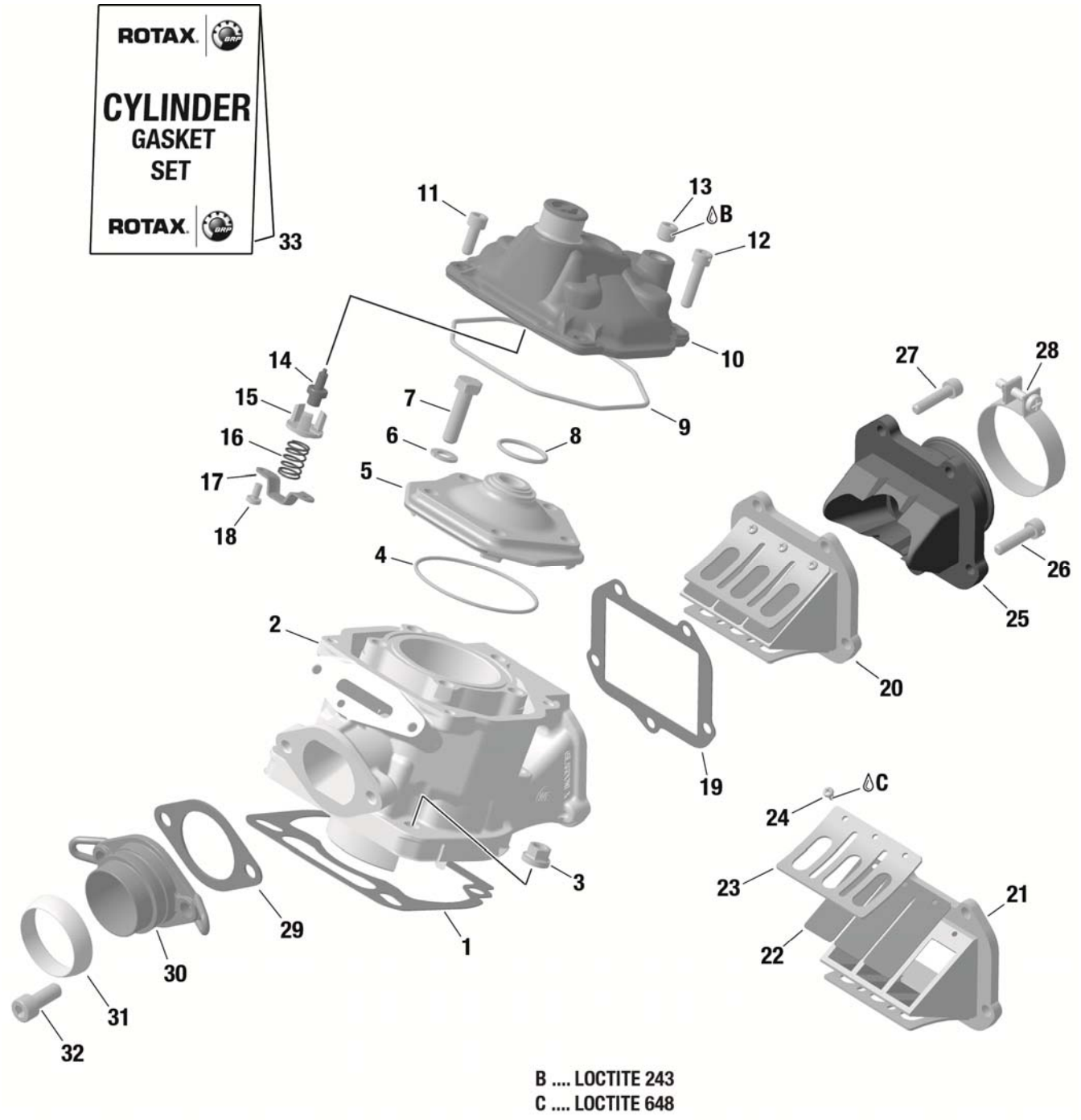
ROTAX
CYLINDER
GASKET
SET
ROTAX
33
11
13
B
12
10
14
15
16
17
18
7
6
8
9
5
4
27
28
26
25
2
20
19
C
24
23
21
22
3
29
1
30
31
32
B .... LOCTITE 243
C .... LOCTITE 648

Chapter 2

ZYLINDER
CYLINDER

BILD-NR. ILL.NO.	TEILE-NR. PART-NO.	BEZEICHNUNG DESCRIPTION	STÜCK QTY.	BARCODE BAR CODE
1	431 337	DICHTUNG 0,2 GASKET 0,2 MM ***Dichtung nur für Rennzwecke verwendbar*** ***Zur Sicherstellung einer korrekten Abdichtung Silicone-Compound-Fett 897061 verwenden*** ***Gasket for racing purpose only*** ***To ensure proper sealing please use Silicone Compound Grease 897061***	N. BED. AS REQ.	
1	650 480	DICHTUNG 0,3 GASKET 0,3 MM	N. BED. AS REQ.	
1	650 483	DICHTUNG 0,4 GASKET 0,4 MM	N. BED. AS REQ.	
1	650 481	DICHTUNG 0,5 GASKET 0,5 MM	N. BED. AS REQ.	
1	650 482	DICHTUNG 0,8 GASKET 0,8 MM	N. BED. AS REQ.	
2	613 933	ZYLINDER NI SI C BESCHICHTET CYLINDER NI SI C PLATED *A: 54,000 - 54,010 MM* *AB: 54,010 - 54,015 MM* *B: 54,015 - 54,025 MM*	1	
3	242 706	BUNDMUTTER M8 COLLAR NUT M8 *Anzugsdrehmoment 24 NM* *Tightening torque 24 NM*	4	
4	250 160	O-RING DIN 3771-64X2-N, FPM 75 O-RING 64X2	1	
5	223 386	BRENNRAUMEINSATZ COMBUSTION CHAMBER INSERT	1	
6	945 752	FEDERRING DIN 128-A8-FST LOCK WASHER A8	5	
7	940 487	SK-SCHRAUBE M8X30 DIN 933, 10.9 HEX.SCREW M8X30 DIN 933, 10.9 *Anzugsdrehmoment 30 NM* *Tightening torque 30 NM*	5	

8	430 782	O-RING DIN 3771-23,3X2,4-N, MVQ 60 O-RING DIN 3771-23,3X2,4-N, MVQ 60	1
9	250 280	O-RING DIN 3771-105X2,5-N, NBR 70 O-RING 105X2,5	1
10	613 104	ZYLINDERKOPFDECKEL ROT CYLINDER HEAD COVER RED	1
11	241 236	ZYL.SCHRAUBE M6X16 DIN 912 GLATT ALLEN SCREW M6X16 DIN 912 *Anzugsdrehmoment 10 NM* *Tightening torque 10 NM*	3
12	641 361	ZYL.SCHRAUBE M6X25 ALLEN SCREW M6X25 *Anzugsdrehmoment 10 NM* *Tightening torque 10 NM* *Mit Bohrung, zum Versiegeln des Motors* *With hole, for sealing the engine*	1
13	641 323	VERSCHLUSSSCHRAUBE 1/8-27NPT PLUG SCREW 1/8-27NPT *Anzugsdrehmoment 10 NM* *Tightening torque 10 NM*	1
14	222 125	THERMOSTAT 45 GRAD CELCIUS THERMOSTAT, 45 DEGREE CELCIUS	1
15	222 175	VENTILTELLER THERMOSTAT HOLDER	1
16	239 950	DRUCKFEDER COMPRESSION SPRING	1
17	222 202	THERMOSTATBUEGEL THERMOSTAT RETAINING BRACKET	1
18	240 195	TAPTITE-SCHRAUBE M4X8 TAPTITE-SCREW M4X8 *Anzugsdrehmoment 3 NM* *Tightening torque 3 NM*	2
19	250 521	DICHTUNG GASKET	1
20-24	224 389	VENTILTRAEGER KPL. REED VALVE ASSY.	1
21	-xxx-	VENTILTRÄGER VENTILTRÄGER *Nicht als Ersatzteil verfügbar; Ventilträger Kpl. 224389 verwenden* *Not available as spare part; Use Reed valve assy. 224389*	1

22	224 430	BLATTVENTIL REED PETAL	2	
23	-xxx-	VENTILANSCHLAG REED PEDAL STOP		
24	240 351	LINSENSCHRAUBE M3X6 DIN 7985 OVAL HEAD SCREW M3X6 DIN 7985	6	
25	267 410	ANSAUGSTUTZEN INTAKE SOCKET	1	
26	641 361	ZYL.SCHRAUBE M6X25 ALLEN SCREW M6X25 *Anzugsdrehmoment 7 NM* *Tightening torque 7 NM* *Mit Bohrung, zum Versiegeln des Motors* *With hole, for sealing the engine*	1	
27	840 861	ZYL.SCHRAUBE M6X25 DIN 912 ALLEN SCREW M6X25 DIN 912 *Anzugsdrehmoment 7 NM* *Tightening torque 7 NM*	4	
28	251 850	SCHLAUCHSCHELLE 51 HOSE CLAMP 51	1	
29	250 271	DICHTUNG GASKET	1	
30	273 190	AUSPUFFSTUTZEN KPL. EXHAUST SOCKET ASSY.	1	
31	450 360	AUSPUFFDICHTUNG EXHAUST GASKET	1	
32	240 071	ZYL.SCHRAUBE M8X20 DIN 912 ALLEN SCREW M8X20 *Anzugsdrehmoment 20 NM* *Tightening torque 20 NM*	2	
33	296 161	DICHTUNGSSATZ ZYLINDER GASKET SET ASSY. CYLINDER *WD-Ring (KAP. 03, POS.8) und Auspuffdichtung (Kap. 02, Pos. 31) nicht enthalten* *Oil seal (Chap. 03, Pos. 8) and exhaust gasket (Chap. 02, Pos. 31) not included*	1	
C	899 788	LOCTITE 648 GREEN, 5 GR.	AS REQ.	
B	897 651	LOCTITE 243 BLUE, 10 CC.	AS REQ.	

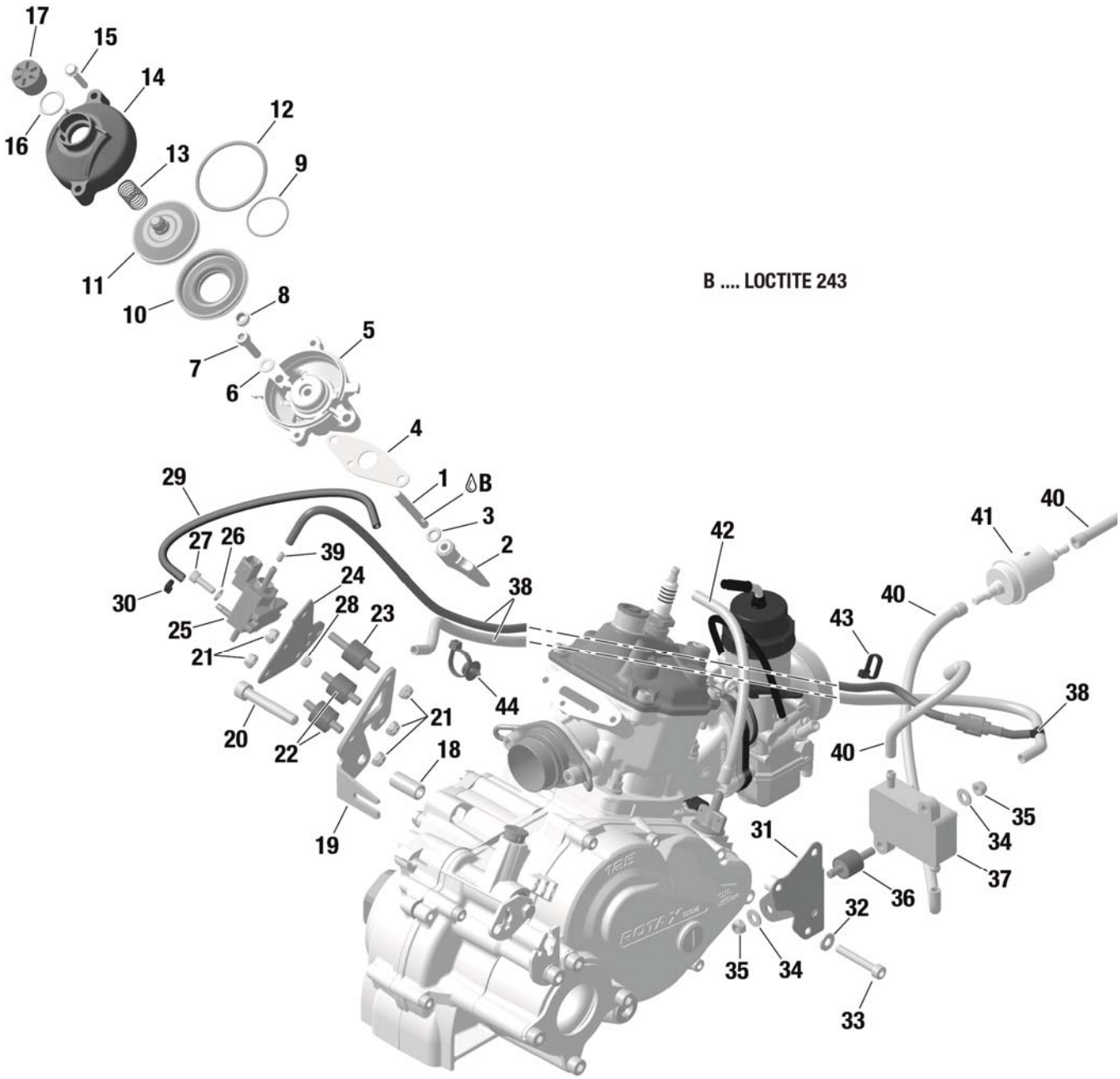
B .... LOCTITE 243
17
15
14
16
12
13
9
11
10
8
7
6
5
4
1
B
3
2
29
27
26
39
30
24
28
25
23
21
38
44
20
22
21
18
19
42
41
40
40
43
38
40
35
34
31
37
36
32
35
34
33

Chapter 3

RAVE
RAVE

BILD-NR. ILL.NO.	TEILE-NR. PART-NO.	BEZEICHNUNG DESCRIPTION	STÜCK QTY.	BARCODE BAR CODE
1	441 357	STIFTSCHRAUBE M6X52,5 STUD M6X52,5 *Anzugsdrehmoment 2-3 NM* *Tightening torque 2-3 NM*	1	
2	253 725	AUSLASSSCHIEBER EXHAUST VALVE	1	
3	230 260	O-RING DIN 3771-6X3-N, NBR 70 O-RING 6X3	1	
4	250 231	DICHTUNG GASKET	1	
5	253 385	SCHIEBERSTANGENFUEHRUNG KPL. VALVE ROD HOUSING KPL.	1	
6	845 020	FEDERSCHEIBE B6 DIN 137 SPRING WASHER B6	2	
7	840 861	ZYL.SCHRAUBE M6X25 DIN 912 ALLEN SCREW M6X25 DIN 912 *Anzugsdrehmoment 10NM* *Tightening torque 10NM*	2	
8	930 500	WD-RING AOF 6X11X3/4,5 NBR OIL SEAL 6X11X3/4,5	1	
9	838 255	SCHLAUCHFEDER 70-1,7-0,3 HOSE SPRING 70-1,7-0,3	1	
10	260 723	SCHIEBERBALG BELLOW	1	
11	854 440	SCHIEBERKOLBEN EXHAUST VALVE PISTON *Anzugsdrehmoment 2-3 NM* *Tightening torque 2-3 NM*	1	
12	939 280	SCHLAUCHFEDER 134-3,0-0,65 HOSE SPRING 134-3,0-0,65	1	
13	239 952	DRUCKFEDER DM13,2 D0,8 L48,5 COMPRESSION SPRING 48,5/0,8 MM	1	

14	911 559	SCHIEBERABDECKUNG VALVE COVER	1	
15	241 270	TAPTITE-SCHRAUBE M5X25 TAPTITE-SCREW M5X25	2	
16	430 220	O-RING DIN 3771-15,9X2,3-N, NBR 70 O-RING 15,9-2,3	1	
17	241 220	EINSTELLSCHRAUBE ADJUSTMENT SCREW	1	
18	247 980	DISTANZBUECHSE 8,2/12/25,5 DISTANCE SLEEVE 8,2/12/25,5	1	
19	651 067	HALTEBLECH RETAINING PLATE	1	
20	841 566	ZYL.SCHRAUBE M8X50 DIN 912 ALLEN SCREW M8X50 *Anzugsdrehmoment 24 NM* *Tightening torque 24 NM*	1	
21	842 041	SICHERUNGSMUTTER DIN 985-M6 -6.6 LOCK NUT M6 - 6.6	5	
22	660 522	RUNDPUFFER 18X15XM6 RUBBER BUFFER 18X15XM6	2	
23	660 520	RUNDPUFFER 18X15XM6 RUBBER BUFFER 18X15XM6	1	
24	651 925	TRAEGERPLATTE MOUNTING PLATE	1	
25	664 630	MAGNETVENTIL SOLENOID VALVE	1	
26	927 571	SCHEIBE 5,3 DIN 125 WASHER 5,3 -400	2	
27	840 514	ZYL.SCHRAUBE ISO 4762 - M5x16 - 8.8 ALLEN SCREW ISO 4762 - M5x16 - 8.8	2	
28	842 030	SICHERUNGSMUTTER DIN 985-M5 LOCK NUT M5	2	
29	660 575	DRUCKLEITUNG 220 MM PRESSURE LINE 220 MM	1	

30	866 718	KABELBINDER 94X2,5 MM TIE WRAP 94x2,5 MM	1	
31	xxx	HALTEBLECH KPL. RETAINING PLATE ASSY. Siehe Kap. 4, Pos. 20 See chap. 4, Pos. 20	1	
32	xxx	SCHEIBE 6,4 DIN 134 WASHER 6,4 DIN 134 Siehe Kap. 4, Pos. 21 See chap. 4, Pos. 21	2	
33	xxx	ZYL. SCHRAUBE M6X30 DIN 912 ALLEN SCREW M6X30 DIN 912 Siehe Kap. 4, Pos. 22 See chap. 4, Pos. 22	2	
34	244 211	SCHEIBE 6,4 DIN 134 WASHER 6,4 DIN 134	4	
35	842 041	SICHERUNGSMUTTER DIN 985-M6 -6.6 LOCK NUT M6 - 6.6	4	
36	660 520	RUNDPUFFER 18X15XM6 RUBBER BUFFER 18X15XM6	2	
37	994 483	MIKUNI-PUMPE MIKUNI-FUEL PUMP	1	
38-39	651 010	SCHLAUCHPAKET RAVE STEUERUNG HOSE PACKAGE RAVE CONTROL UNIT	1	
40	xxx	SCHLAUCH A5x8/ 2500 MM HOSE A5x8/ 2500 MM Siehe Kap. 9, Pos. 50 See chap. 9, Pos. 50	N.B. As Req.	
41	274 161	KRAFTSTOFFFILTER MIT ROTAX-AUFDRUCK FUEL FILTER WITH ROTAX PRINT	1	
42	xxx	SCHLAUCH A5x5/ 2500 MM HOSE A5x5/ 2500 MM Siehe Kap. 9, Pos. 50 See chap. 9, Pos.50	1	
43	866 714	KABELBINDER 142X3,2 MM TIE WRAP 142x3,2 MM	1	
44	951 341	KABELBINDER MIT HALTER 202X4,6 TIE WRAP WITH MOUNT 202X4,6	1	
B	897 651	LOCTITE 243 BLAU 10ML LOCTITE 243 BLUE, 10 CC.	N.B. As Req.	

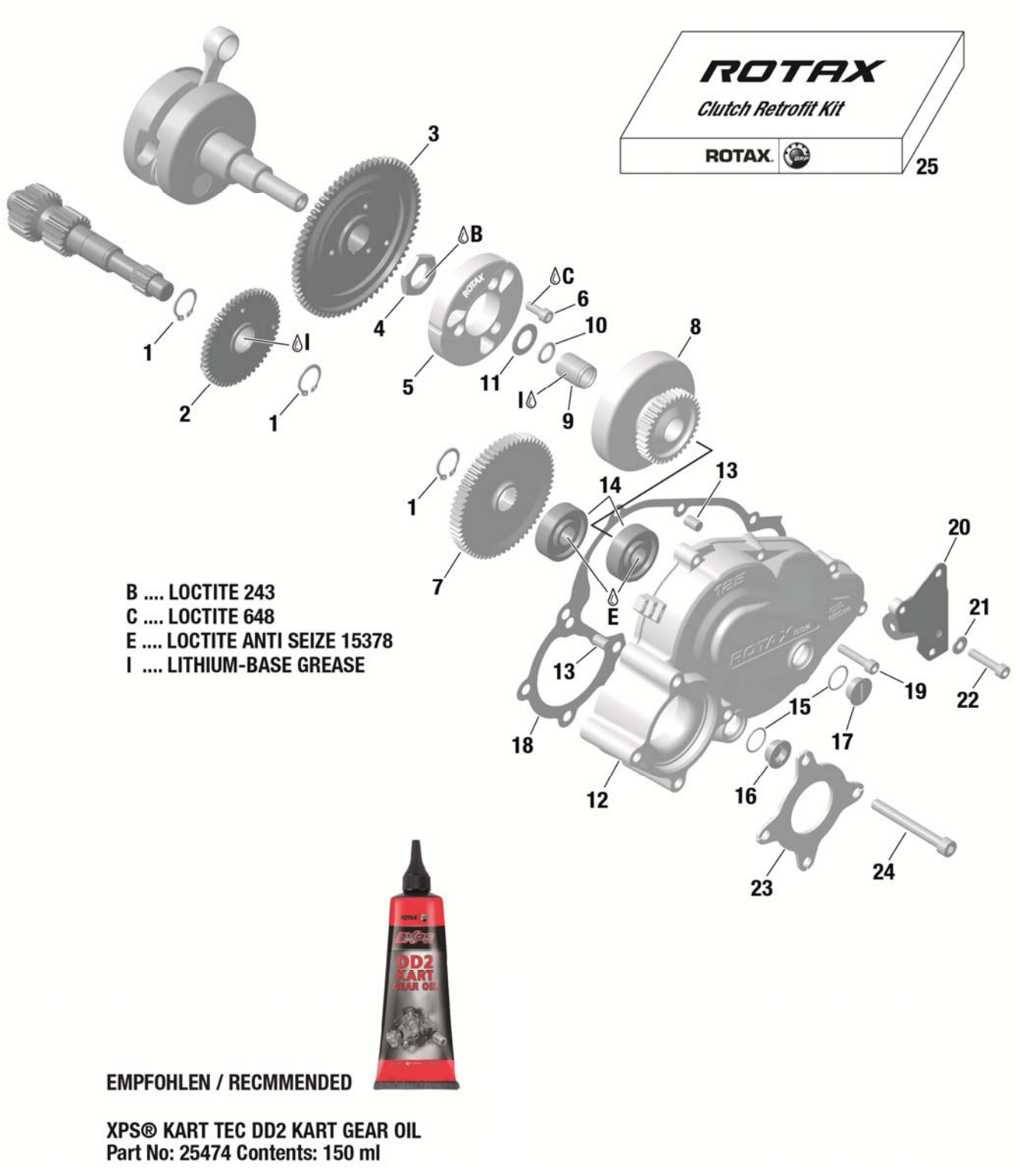
ROTAX
Clutch Retrofit Kit
ROTAX
25
B .... LOCTITE 243
C .... LOCTITE 648
E .... LOCTITE ANTI SEIZE 15378
I .... LITHIUM-BASE GREASE
EMPFOHLEN / RECMMENDED
XPS® KART TEC DD2 KART GEAR OIL
Part No: 25474 Contents: 150 ml

Chapter 4

FLIEHKRAFTKUPPLUNG, AUSGLEICHSTRIEB, PRIMÄRTRIEB, KUPPLUNGSDECKEL
CENTRIFUGAL CLUTCH, BALANCE SHAFT DRIVER, PRIMARY DRIVE, CLUTCH COVER

BILD-NR. ILL.NO.	TEILE-NR. PART-NO.	BEZEICHNUNG DESCRIPTION	STÜCK QTY.	BARCODE BAR CODE
1	945 664	SICHERUNGSRING DIN 983-20X1,2 RETAINING RING WITH LUG DIN 983-20X1,2	3	
2	635 748	AUSGLEICHSRAD 50 Z KPL. BALANCE GEAR 50 T ASSY.	1	
3	434 843	STARTERZAHNKRANZ 70 Z STARTER GEAR 70 T	1	
4	242 879	SK-MUTTER M22X1,5 SW30 H=6 HEX.NUT M22X1,5 H=6 *Anzugsdrehmoment 180 NM* *Tightening torque 180 NM*	1	
5	659 905	KUPPLUNG CLUTCH	1	
6	640 901	ZYL.SCHRAUBE M6X16 DIN 912 ALLEN SCREW M6X16 DIN 912 *Anzugsdrehmoment 20 NM* *Tightening torque 20 NM*	3	
7	435 541	SEKUNDAERRAD 65 Z SECONDARY GEAR 65 T *Optional*	1	
7	435 542	SEKUNDAERRAD 64 Z SECONDARY GEAR 64 T *Optional*	1	
7	435 543	SEKUNDAERRAD 63 Z SECONDARY GEAR 63 T *Optional*	1	
7	435 544	SEKUNDAERRAD 62 Z SECONDARY GEAR 62 T *Standard*	1	
7	435 545	SEKUNDAERRAD 61 Z SECONDARY GEAR 61 T *Optional Secondary Gear*	1	
7	435 546	SEKUNDAERRAD 60 Z SECONDARY GEAR 60 T *Optional*	1	

7	435 547	SEKUNDAERRAD 59 Z SECONDARY GEAR 59 T *Options Sekundärrad* *Optional Secondary Gear*	1
8	659 922	KUPPL.TROMMEL M. ANTRIEBSRAD 32Z CLUTCH W. PRIMARY DRIVE GEAR 32T *Optional*	1
8	659 923	KUPPL.TROMMEL M. ANTRIEBSRAD 33Z CLUTCH W. PRIMARY DRIVE GEAR 33T *Optional*	1
8	659 920	KUPPL.TROMMEL M. ANTRIEBSRAD 34Z CLUTCH W. PRIMARY DRIVE GEAR 34T *Optional*	1
8	659 924	KUPPL.TROMMEL M. ANTRIEBSRAD 35Z CLUTCH W. PRIMARY DRIVE GEAR 35T *Standard*	1
8	659 926	KUPPL.TROMMEL M. ANTRIEBSRAD 36Z CLUTCH W. PRIMARY DRIVE GEAR 36T *Optional*	1
8	659 927	KUPPL.TROMMEL M. ANTRIEBSRAD 37Z CLUTCH W. PRIMARY DRIVE GEAR 37T *Optional*	1
8	659 928	KUPPL.TROMMEL M. ANTRIEBSRAD 38Z CLUTCH W. PRIMARY DRIVE GEAR 38T *Optional*	1
9	632 410	NADELKAEFIG 15X19X24 NEEDLE CAGE 15X19X24	1
10	950 815	O-RING DIN 3771-12X2,5-N, NBR 70 O-RING DIN 3771-12X2,5-N, NBR 70	1
11	927 057	ANLAUFSCHEIBE 15,2/25/1 THRUST WASHER 15,2/25/1	1
12	610 643	KUPPLUNGSDECKEL, SCHWARZ CLUTCH COVER, BLACK COATED	1
13	632 010	ZYLINDERROLLE 8X12 DIN 5402 PIN 8X12 DIN 5402	2
14	232 291	RK-LAGER 6302 TN9/C3 BALL BEARING 6302 TN9C3/15-42-13	2

15	250 890	O-RING DIN 3771-17X1,5-N, NBR 70 O-RING DIN 3771-17X1,5-N	2	
16	240 820	OELSTANDSSCHRAUBE M18X1,5 OIL LEVEL SCREW M18X1,5	1	
17	241 800	VERSCHLUSSSCHRAUBE M18X1,5 PLUG SCREW M18X1,5	1	
18	630 512	DICHTUNG GASKET	1	
19	840 880	ZYL.SCHRAUBE M6X30 DIN 912 ALLEN SCREW M6X30 DIN 912 *Anzugsdrehmoment 10 NM* *Tightening torque 10 NM*	4	
20	651 056	HALTEBLECH KPL. RETAINING PLATE ASSY.	1	
21	244 211	SCHEIBE 6,4 DIN 134 WASHER 6,4 DIN 134	2	
22	241 816	ZYL.SCHRAUBE M6X40 DIN 912 ALLEN SCREW M6X40 DIN 912 *Anzugsdrehmoment 10 NM* *Tightening torque 10 NM*	2	
23	251 335	STUETZBLECH SUPPORT PLATE	1	
24	841 991	ZYL.SCHRAUBE M8X70 DIN 912 ALLEN SCREW M8X70 *Anzugsdrehmoment 22 NM* *Tightening torque 22 NM*	4	
25	281 723	NACHRUESTSATZ KUPPLUNG 125 MAX DD2 RETROFIT KIT CLUTCH 125 MAX DD2	1	
I	897 330	LITHIUM-BASE GREASE, 250 GR.,	AS REQ.	
E	297 434	LOCTITE ANTI SEIZE 15378 50 ML.	AS REQ.	
B	897 651	LOCTITE 243 BLUE, 10 CC.	AS REQ.	
C	899 788	LOCTITE 648 GREEN, 5 GR.	AS REQ.	

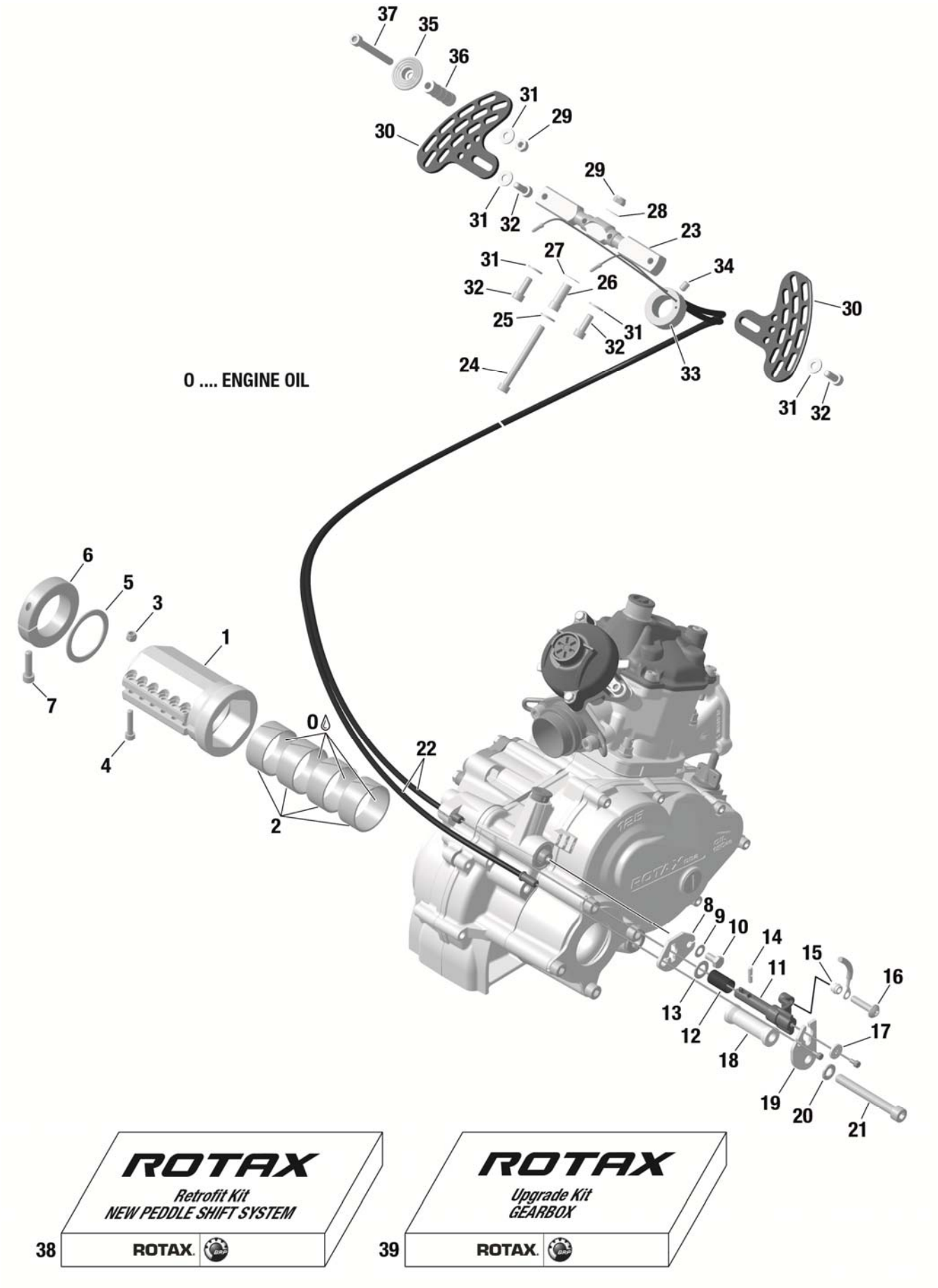
0 .... ENGINE OIL
ROTAX
Retrofit Kit
NEW PEDDLE SHIFT SYSTEM
ROTAX.
ROTAX
Upgrade Kit
GEARBOX
ROTAX.

Chapter 5

ABTRIEB, SCHALTUNG, SCHALTSEILZÜGE, LENKRADNABE
POWER TAKE OFF, SHIFTING, SHIFTING BOWDEN CABLES, STEERING WHEEL HUB

BILD-NR. ILL.NO.	TEILE-NR. PART-NO.	BEZEICHNUNG DESCRIPTION	STÜCK QTY.	BARCODE BAR CODE
1-4	281 870	KUPPLUNGSFLANSCHSATZ COUPLING FLANGE SET	1	
1	-xxx-	KUPPLUNGSFLANSCH COUPLING FLANGE	1	
2	233 120	LAGERHUELSE 40X44X20 PLAIN BEARING 40X44X20	4	
3	942 025	SICHERUNGSMUTTER DIN-982 M5-8 LOCK NUT M5	6	
4	940 882	ZYL.SCHRAUBE ISO 4762 - M5x30 - 8.8 ALLEN SCREW ISO 4762 - M5x30 - 8.8	6	
5	427 280	ANLAUFSCHEIBE 40/50/1,5 THRUSTWASHER 40/50/1,5	1	
6	251 740	KLEMMRING CLAMPING RING	1	
7	840 861	ZYL.SCHRAUBE M6X25 DIN 912 ALLEN SCREW M6X25 DIN 912 *Anzugsdrehmoment 10 NM* *Tightening torque 10 NM*	1	
8	251 406	HALTEBLECH RETAINING PLATE	1	
9	845 020	FEDERSCHEIBE B6 DIN 137 SPRING WASHER B6	1	
10	240 381	SK-SCHRAUBE M6X12 DIN 933 HEX. SCREW M6X12 *Anzugsdrehmoment 10 NM* *Tightening torque 10 NM*	1	
11-14	660 538	SCHALTKONTAKT KPL SHIFT CONTACT ASSY.	1	
12	-xxx-	DRUCKFEDER DM11,3 D1,4 L59,0 COMPRESSION SPRING DM11,3 D1,4 L59,0	1	
13	-xxx-	ANLAUFSCHEIBE THRUST WASHER	1	

14	-xxx-	FIXIERSTIFT LOCATING PIN	1	
15	974 531	KRAFTSTOFFSCHLAUCH 8 MM FUEL TUBE 8 MM	1	
16	940 431	PLASTITE-SCHRAUBE 6X25 PLASTITE SCREW 6X25	1	
17	626 770	PLASTIKSCHEIBE 3,8/14/2 WASHER 3,8/14/2	1	
18	847 482	DISTANZHUELSE SPACER	1	
19	251 521	SCHALTKONTAKTFUEHRUNG SHIFT CONTACT GUIDANCE	1	
20	945 752	FEDERRING DIN 128-A8-FST LOCK WASHER A8	1	
21	841 991	ZYL.SCHRAUBE M8X70 DIN 912 ALLEN SCREW M8X70 *Anzugsdrehmoment 22 NM* *Tightening torque 22 NM*	1	
22	297 134	SEILZUG KPL. CABLE BOWDEN ASSY.	1	
23	257 990	SCHALTWIPPE CONTROL WHIP	1	
24	240 371	ZYL.SCHRAUBE M6X60 DIN 912 ALLEN SCREW M6X60	1	
25	244 211	SCHEIBE 6,4 DIN 134 WASHER 6,4 DIN 134	1	
26	247 440	DISTANZHUELSE SPACER	1	
27	227 945	ANLAUFSCHEIBE 8,5/15/0,5 THRUST WASHER 8,5/15/0,5	1	
28	845 020	FEDERSCHEIBE B6 DIN 137 SPRING WASHER B6	1	
29	842 040	SICHERUNGSMUTTER DIN 985-M6 LOCK NUT M6	1	
30	657 010	SCHALTHEBEL CONTROL LEVER	2	

31	244 211	SCHEIBE 6,4 DIN 134 WASHER 6,4 DIN 134	4	
32	241 236	ZYL.SCHRAUBE M6X16 DIN 912 GLATT ALLEN SCREW M6X16 DIN 912	4	
33	651 510	SEILWIDERLAGER CABLE SUPPORT	1	
34	841 771	GEWINDESTIFT M6X8 DIN 913 SET SCREW M6X8	1	
35	657 030	DRUCKSCHEIBE THRUST WASHER *Optional*	N. BED AS REQ.	
36	647 190	DISTANZHUELSE SPACER *Optional*	N. BED AS REQ.	
37	240 371	ZYL.SCHRAUBE M6X60 DIN 912 ALLEN SCREW M6X60 *Optional*	N. BED AS REQ.	
38	281 850	UMRUESTSATZ SCHALTSYSTEM 125 MAX DD2 RETROFIT KIT PADDLE SHIFT S. 125 MAX DD2 *DD2*	1	
39	281 855	UMRUESTSATZ GETRIEBE 125 MAX DD2 RETROFIT KIT GEARBOX 125 MAX DD2	1	
O	-xxx-	MOTOROEL ENGINE OIL	N.B. AS REQ.	

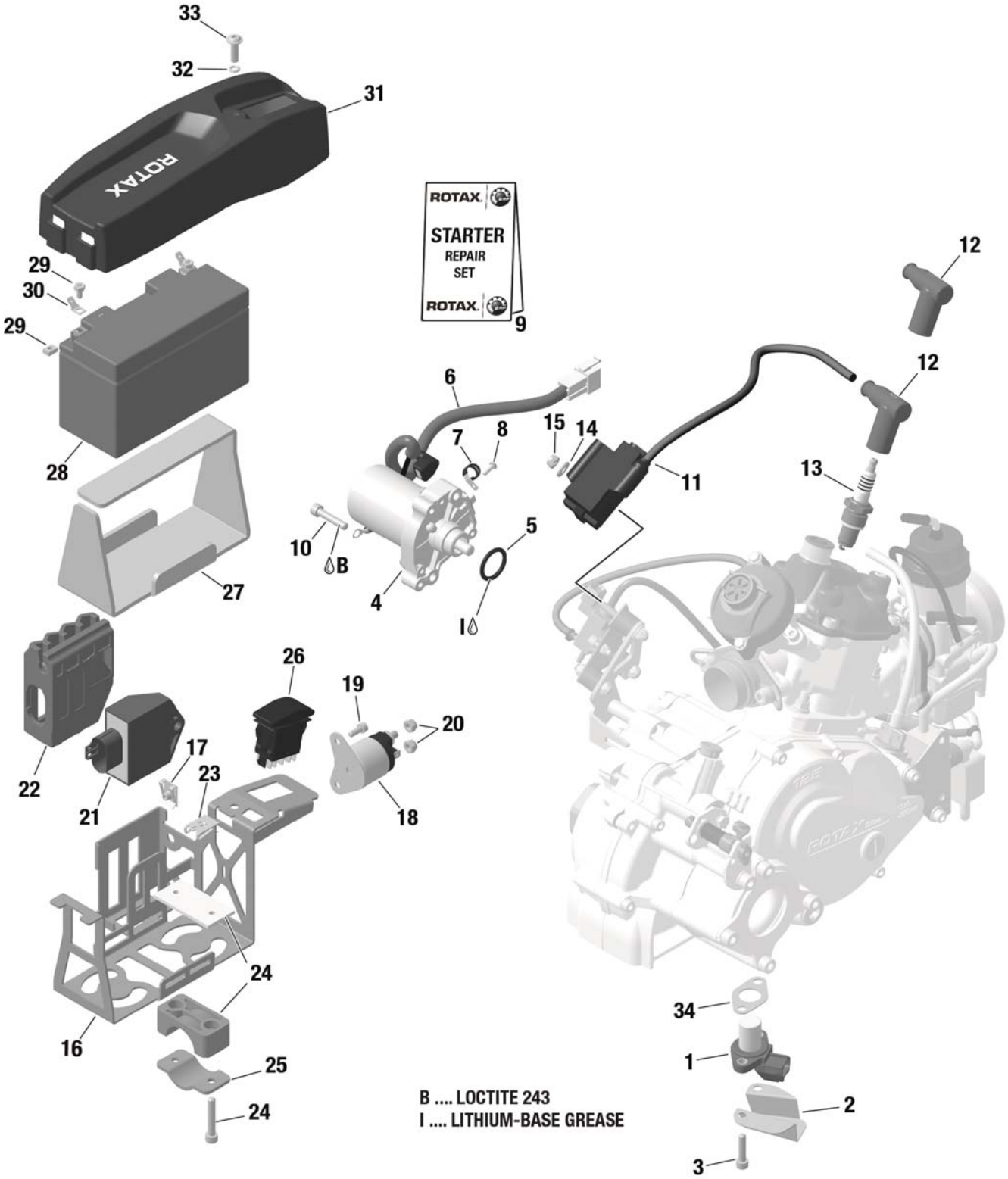
33
32
31
ROTAX
29
30
29
28
27
ROTAX
STARTER
REPAIR
SET
ROTAX
9
12
6
12
7
8
15
14
11
13
10
B
4
5
I
26
19
20
22
17
23
21
18
24
16
24
25
24
34
1
2
3
B .... LOCTITE 243
I .... LITHIUM-BASE GREASE

Chapter 6

ZÜNDANLAGE, E-STARTER, BATTERIE, BATTERIEDECKEL, LADEGERÄT, KABELBAUM
IGNITION UNIT, E-STARTER, BATTERY, BATTERY COVER, BATTERY CHARGER, CABLE HARNESS

BILD-NR. ILL.NO.	TEILE-NR. PART-NO.	BEZEICHNUNG DESCRIPTION	STÜCK QTY.	BARCODE BAR CODE
1	265 560	KURBELWELLENSENSOR PICK UP SENSOR *Inkl. Gummiring; Gummiring nicht separat erhältlich* *Incl. rubber ring; rubber ring not available separately*	1	
2	251 531	SCHUTZBLECH PROTECTION SHIELD	1	
3	840 861	ZYL.SCHRAUBE M6X25 DIN 912 ALLEN SCREW M6X25 DIN 912 *Anzugsdrehmoment 10 NM* *Tightening torque 10 NM*	2	
4-8	294 805	E-STARTER KPL. ELECTRIC STARTER ASSY.	1	
5	-xxx-	O-RING O-RING *Inkludiert in Reparatursatz E-Starter 281262* *Included in repair kit E-starter 281262*	1	
6	265 532	STARTERKABEL KPL. CABLE ASSY.	1	
7	651 940	LEITUNGSSCHELLE CABLE CLAMP	1	
8	-xxx-	SCHRAUBE M3x8 SCREW M3x8 *Inkludiert in Reparatursatz E-Starter 281262* *Included in repair kit E-starter 281262*	2	
9	281 262	REPARATURSATZ E-STARTER REPAIR KIT (ELECTRIC STARTER) ***Beinhaltet / Contains:*** *2 X SCHRAUBE M3X8 / SCREW M3X8* *2 X DRUCKFEDER / COMPRESSION SPRING* *1 X SCHLEIFKOHLE LINKS / CARBON BRUSH LEFT* *1 X SCHLEIFKOHLE RECHTS / CARBON BRUSH RIGHT* *1 X O-RING*	1	
10	840 880	ZYL.SCHRAUBE M6X30 DIN 912 ALLEN SCREW M6X30 DIN 912 *Anzugsdrehmoment 10 NM* *Tightening torque 10 NM*	2	

11-12	666 825	ZUENDSPULE IGNITION COIL	1
12	866 708	WIDERSTANDSSTECKER SPARK PLUG CONNECTOR *Standard*	1
12	866 707	WIDERSTANDSSTECKER SPARK PLUG CONNECTOR *Optional – Racing, rot* *Optional – Racing, red*	1
13	298 103	ZUENDKERZE NGK GR9DI-8 VERPACKT SPARK PLUG NGK GR9DI-8	1
14	244 211	SCHEIBE 6,4 DIN 134 WASHER 6,4 DIN 134	1
15	842 041	SICHERUNGSMUTTER DIN 985-M6 -6.6 LOCK NUT M6 - 6.6	1
16	251 127	BATTERIEHALTER BATTERY CLAMP	1
17	842 680	BLECHMUTTER M5 SHEET NUT M5	2
18	992 819	ANLASSERRELAIS KPL. STARTER RELAY ASSY.	1
19	640 541	ZYL.SCHRAUBE M5X12 DIN 912 ALLEN SCREW M5X12 DIN 912	2
20	842 040	SICHERUNGSMUTTER DIN 985-M6 LOCK NUT M6	2
21	666 816	STEUERGERAET DD2 ELECTRONIC BOX DD2	1
22	201 900	DAEMPFUNGSGUMMI RUBBER PAD	1
23	242 141	BLECHMUTTER M6 SHEET NUT M6	1
24-25	251 254	ROHRSCHELLENSATZ PIPE CLAMP SET *Nur für Rohrdurchmesser 32 mm* *For tube diameter 32 mm only*	2
25	251 360	ROHRSCHELLE PIPE CLAMP	1

26	264 852	KOMBISCHALTER MULTIPLE FUNCTION SWITCH	1	
27	660 767	GUMMIPLATTE RUBBER PAD	1	
28-29	265 518	BATTERIE 12V-6,5Ah BEFUELLT BATTERY 12 V-6,5Ah PREFILLED *YUASA-ROTAX*	1	
28	265 516	BATTERIE 12V-6,5Ah UNBEFUELLT RTX BATTERY 12 V-6,5Ah UNFILLED RTX *YUASA-ROTAX* *nicht per Luftfracht bestellbar* *cannot be ordered via air freight*	1	
29	481 380	BATTERIE BEFESTIGUNGSKIT BATTERY FIXATION KIT	1	
30	864 950	SCHRAUB-FLACHSTECKER FLAT CONNECTOR	2	
31	201 602	BATTERIEDECKEL BATTERY COVER	1	
32	831 929	O-RING DIN 3771-5X2-N, FPM 75 O-RING 5X2	1	
33	440 761	LINSENFLANSCHKOPFSCHRAUBE M6X20 ALLEN SCREW W. ROUNDED FLANGE HEAD M6X20	1	
34	431 500	DICHTUNG GASKET	1	
B	897 651	LOCTITE 243 BLAU 10ML LOCTITE 243 BLUE, 10 CC.	N.B. As Req.	
I	897 330	LITHIUMSEIFENFETT KSN-30 DIN 51825 LITHIUM-BASE GREASE, 250 GR.,	N.B. As Req.	

6
5
2
3
4
1
11

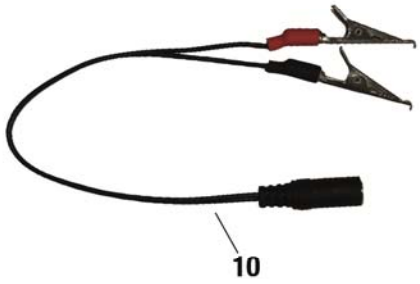
10

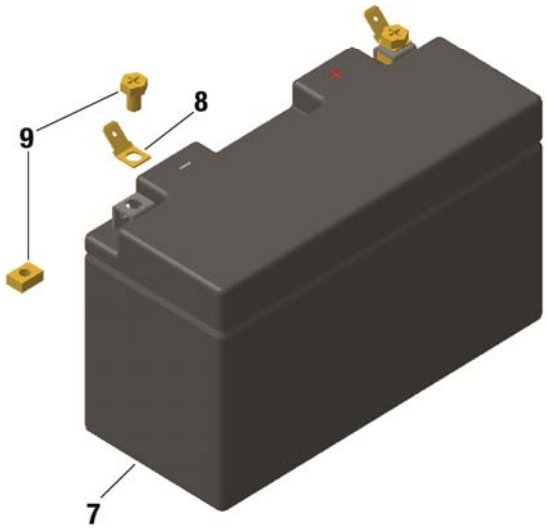
9
8
7

13

ROTAX
12

Chapter 7

BATTERIE, LADEGERÄTE
BATTERY, BATTERY CHARGER

BILD-NR. ILL.NO.	TEILE-NR. PART-NO.	BEZEICHNUNG DESCRIPTION	STÜCK QTY.	BARCODE BAR CODE
1	265 148	BATTERIELADEGERAET BATTERY CHARGER	1	
2	266 018	ROW-STECKER ADAPTER-ROW	1	
3	266 010	EURO-STECKER ADAPTER-EURO	1	
4	266 012	UK-STECKER ADAPTER-UK	1	
5	266 014	USA-STECKER ADAPTER-USA	1	
6	266 016	AUSTRALIEN-STECKER ADAPTER-AUSTRALIA	1	
7-8	265 518	BATTERIE 12V-6,5Ah BEFUELLT BATTERY 12 V-6,5Ah PREFILLED *YUASA-ROTAX*	1	
7	265 516	BATTERIE 12V-6,5Ah UNBEFUELLT RTX BATTERY 12 V-6,5Ah UNFILLED RTX *YUASA-ROTAX* *Nicht per Luftfracht bestellbar* *Not available via airfreight*	1	
8	864 950	SCHRAUB-FLACHSTECKER FLAT CONNECTOR	2	
9	481 380	BATTERIE BEFESTIGUNGSKIT BATTERY FIXATION KIT	1	
10	266 022	ADAPTERKABEL LADEGERAET 125 CONNECTOR CABLE FOR BATTERY CHARGER 125	1	
11	581 320	BATTERIELADEGERAET ACTIVA EASY 1202 BATTERYCHARGER ACTIVIA EASY 1202	1	
12	265 030	BATTERIE LITHIUM TYP 12V-2,3/2,5Ah BATTERY LITHIUM TYPE 12V-2,3/2,5Ah *Nicht per Luftfracht bestellbar* *Not available via airfreight*	1	

13	581 325	BATTERIELADEGERAET OPTIMATE LITHIUM 6 BATTERY CHARGER OPTIMATE LITHIUM 6 *Nur EU Anschluss* *Darf nicht in Japan verwendet werden* *EU connector only* *Must not be used in Japan*	1

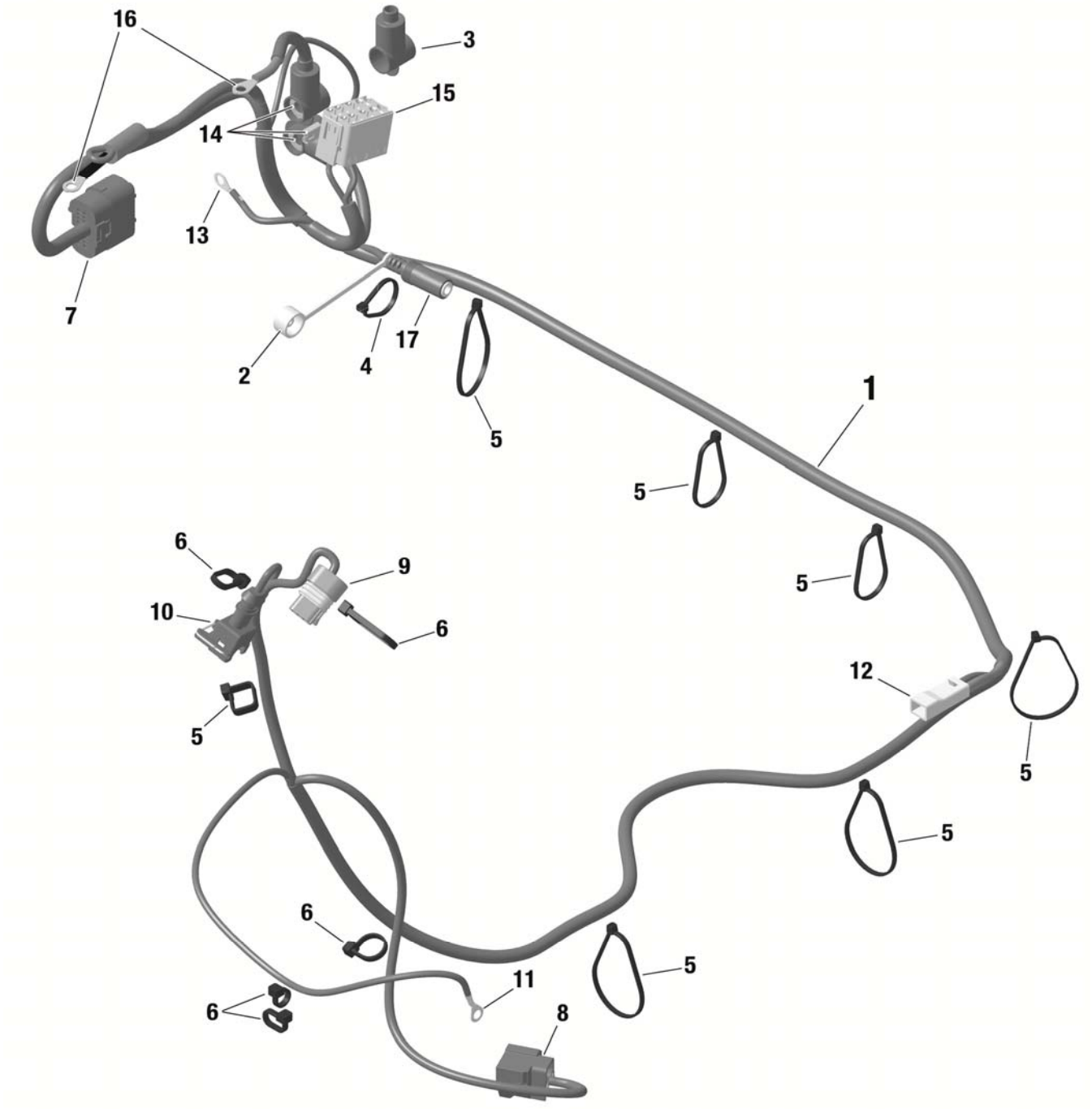
16
3
15
14
13
7
2
4
17
5
1
5
5
6
9
10
6
12
5
5
5
6
11
5
6
8

Chapter 8

KABELBAUM
WIRING HARNESS

BILD-NR. ILL.NO.	TEILE-NR. PART-NO.	BEZEICHNUNG DESCRIPTION	STÜCK QTY.	BARCODE BAR CODE
1	666 835	KABELBAUM WIRING HARNESS	1	
2	666 902	ABDECKKAPPE LADEBUCHSE CHARGING PLUG CAP	1	
3	666 904	ABDECKKAPPE RELAIS RELAY CAP	2	
4	866 718	KABELBINDER 94X2,5 MM TIE WRAP 94x2,5 MM	2	
5	651 397	KABELBINDER 250X4,8 MM TIE WRAP 250X4,8 MM	6	
6	866714	KABELBINDER 142X3,2 MM TIE WRAP 142x3,2 MM	5	
7	-xxx-	ANSCHLUSS ECU CONNECTOR ECU	1	
8	-xxx-	ANSCHLUSS KURBELWELLENSENSOR CONNECTOR PICK UP SENSOR	1	
9	-xxx-	ANSCHLUSS ZUENDSPULE CONNECTOR IGNITION COIL	1	
10	-xxx-	ANSCHLUSS RAVESTEUERUNG CONNECTOR RAVE	1	
11	-xxx-	ANSCHLUSS SCHALTKONTAKT CONNECTOR SHIFT CONTACT ***Nur für 125 MAX DD2*** ***For 125 MAX DD2 only***	1	
12	-xxx-	ANSCHLUSS STARTER CONNECTOR STARTER	1	
13	-xxx-	ANSCHLUSS MASSE CONNECTOR GROUND	1	
14	-xxx-	ANSCHLUSS STARTERRELAIS CONNECTOR STARTER RELAY	3	
15	-xxx-	ANSCHLUSS KOMBISCHALTER CONNECTOR MULTIPLE FUNCTION SWITCH	1	
16	-xxx-	ANSCHLUSS BATTERIE CONNECTOR BATTERY	2	
17	-xxx-	ANSCHLUSS BATTERIELADEGERAET CONNECTOR BATTERY CHARGER	1	

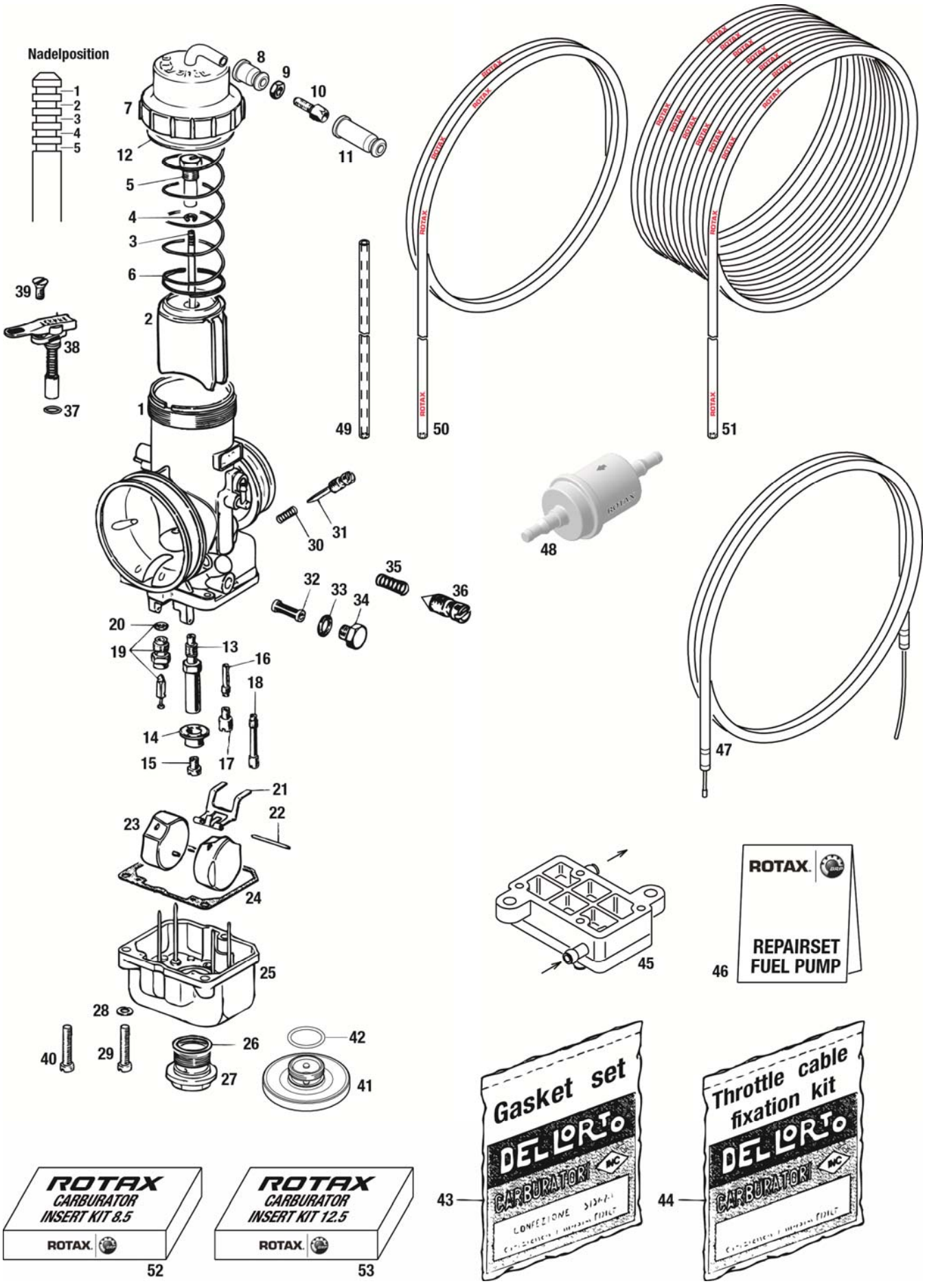
Nadelposition
1
2
3
4
5
7
8
9
10
11
12
5
4
3
6
2
1
39
38
37
49
50
51
48
30
31
32
33
34
35
36
20
19
13
16
18
14
15
17
47
21
22
23
24
25
28
40
29
26
27
42
41
45
46
REPAIRSET
FUEL PUMP
ROTAX
CARBURATOR
INSERT KIT 8.5
ROTAX
52
ROTAX
CARBURATOR
INSERT KIT 12.5
ROTAX
53
Gasket set
DELLORTO
CARBURATOR
43
Throttle cable
fixation kit
DELLORTO
CARBURATOR
44

Chapter 9

VERGASER, DICHTUNGSSATZ (VERGASER), KRAFTSTOFFPUMPE, REPARATURSATZ (KRAFTSTOFFPUMPE), KRAFSTOFFSCHLAUCH, GASSEILZUG
CARBURETTOR, GASKET SET (CARBURETTOR), FUEL PUMP, REPAIR SET (FUEL PUMP), FUEL TUBE, CABLE BOWDEN

BILD-NR. ILL.NO.	TEILE-NR. PART-NO.	BEZEICHNUNG DESCRIPTION	STÜCK QTY.	BARCODE BAR CODE
1	295 062	DELL'ORTO VERGASER VHSB 34 XS DD2 DELL'ORTO CARBURETOR VHSB 34 XS DD2 *Bedüsung „R 09808“, Hauptdüse 145* *Jetting „R 09808“, Main jet 145*	1	
2	262 031	VERGASERSCHIEBER 45 CARBURATOR SLIDE 45 *Standard*	1	
3	261 192	DUESENNADEL K 57 JET NEEDLE K 57 *Standard*	1	
4	245 630	SICHERUNGSSCHEIBE CLIP	1	
5	261 270	EINHAENGSCHRAUBE NIPPLE SCREW	1	
6	239 885	SCHIEBERFEDER THROTTLE VALVE SPRING	1	
7	261 427	SCHIEBERDECKEL MIT ROHRBOGEN KPL. CARBURETOR COVER WITH BENT TUBE ASSY.	1	
8	-xxx-	GUMMITÜLLE KLEIN RUBBER GROMMET SMALL *Verwende Seileinhängungssatz 268040* *Use throttle cable fixation kit 268040*	1	
9	-xxx-	SK-MUTTER M6X0,75 HEX.NUT M6X0,75 *Verwende Seileinhängungssatz 268040* *Use throttle cable fixation kit 268040*	1	
10	-xxx-	STELLSCHRAUBE M6X0,75 ADJUSTMENT SCREW M6X0,75 *Verwende Seileinhängungssatz 268040* *Use throttle cable fixation kit 268040*	1	
11	-xxx-	GUMMITÜLLE GROSS RUBBER GROMMET BIG *Verwende Seileinhängungssatz 268040* *Use throttle cable fixation kit 268040*	1	

12	-xxx-	DICHTUNG GASKET *Verwende Dichtungssatz 293834* *Use gasket kit 293834*	1
13	262 042	NADELDUESE DP 267 NEEDLE JET DP 267 *Standard*	1
14	261 550	DUESENTASSE MAIN JET CUP	1
15	281 477	HAUPTDUESENSATZ 100-102-105-108-110-112 MAIN JET KIT 100-102-105-108-110-112	1
15	281 476	HAUPTDUESENSATZ 115-118-120-122-125-128-130 MAIN JET KIT 115-118-120-122-125-128-130	1
15	281 473	HAUPTDUESENSATZ 132-135-138-140-142 MAIN JET KIT 132-135-138-140-142	1
15	281 471	HAUPTDUESENSATZ 145-148-150-152-155-158 MAIN JET KIT 145-148-150-152-155-158	1
15	281 470	HAUPTDUESENSATZ 160-162-165-168-170-172 MAIN JET KIT 160-162-165-168-170-172	1
15	281 472	HAUPTDUESENSATZ 175-178-180-182-185-188 MAIN JET KIT 175-178-180-182-185-188	1
15	281 474	HAUPTDUESENSATZ 190-192-195-198-200 MAIN JET KIT 190-192-195-198-200	1
16	281 885	LEERLAUFDUESENEINSATZ SET 30-35-40-45-50-55-60 IDLE JET INSERT SET 30-35-40-45-50-55-60 *Optional*	1
17	281 882	LEERLAUFDUESENSATZ 30-35-40-45-50-55-60 IDLE JET KIT 30-35-40-45-50-55-60 *Optional*	1
18	261 895	STARTDUESE 60 STARTING JET 60 *Standard*	1
19	261 880	NADELVENTIL 150 NEEDLE VALVE 150 *Standard*	1

19	261 881	NADELVENTIL 200 NEEDLE VALVE 200 *Optional*	1
20	-xxx-	DICHTUNG GASKET *Dichtungssatz 293834 verwenden* *Use gasket kit 293834*	1
21	261 290	SCHWIMMERAUFHAENGUNG FLOAT BRACKET	1
22	229 271	STIFT FLOAT PIN	1
23	268 030	SCHWIMMER 5,2 GR. FLOAT 5,2 GR. *Optional*	2
23	268 031	SCHWIMMER 3,6 GR. FLOAT 3,6 GR. *Optional*	2
23	268 032	SCHWIMMER 4,0 GR. FLOAT 4,0 GR. *Standard*	2
24	-xxx-	DICHTUNG GASKET *Dichtungssatz 293834 verwenden* *Use gasket kit 293834*	1
25	-xxx-	SCHWIMMERKAMMER FLOAT CHAMBER *Nicht als Ersatzteil erhältlich* *Not available as spare part*	1
26	-xxx-	DICHTUNG GASKET *Dichtungssatz 293834 verwenden* *Use gasket kit 293834*	1
27	261 373	ABLASSSCHRAUBE PLUG SCREW *Standard*	1
28	845 312	HOCHSPANNRING VHZ 5 LOCK WASHER VHZ 5	3
29	262 020	ZYL.SCHRAUBE M5X20 ALLEN SCREW M5X20	2
30-31	268 044	LUFTREGULIERSCHRAUBENSATZ ADJUSTMENT SCREW KIT	1

30	-xxx-	DRUCKFEDER COMPRESSION SPRING	1	
31	-xxx-	LUFTREGULIERSCHRAUBE ADJUSTMENT SCREW	1	
32-34	268 042	KRAFTSTOFFSIEBSATZ FUEL SIEVE KIT	1	
32	-xxx-	KRAFTSTOFFSIEB FUEL FILTER	1	
33	-xxx-	DICHTUNG GASKET	1	
34	-xxx-	VERSCHLUSSSCHRAUBE PLUG SCREW	1	
35	-xxx-	DRUCKFEDER COMPRESSION SPRING *Nicht als Ersatzteil erhältlich* *Not available as spare part*	1	
36	-xxx-	EINSTELLSCHRAUBE ADJUSTMENT SCREW *Nicht als Ersatzteil erhältlich* *Not available as spare part*	1	
37	-xxx-	DICHTUNG GASKET *Dichtungssatz 293834 verwenden* *Use gasket kit 293834*	1	
38	261 915	CHOKERHEBEL KPL. CHOKE LEVER ASSY.	1	
39	240 505	SENKSCHRAUBE M4,5X10 COUNTERSUNK SCREW M4,5X10	1	
40	240 184	ZYL.SCHRAUBE M5X20 ALLEN SCREW M5X20 *Schraube mit Bohrung zum Versiegeln* *Screw with hole for sealing*	1	
41	261 030	VERGASERVERSCHLUSSSCHRAUBE CARBURETOR PLUG SCREW *Optional*	1	
42	230 890	O-RING DIN 3771-17X2,5-N, NBR 70 O RING 17-2,5	1	
43	293 834	DICHTUNGSSATZ GASKET SET *Für Vergaser* *For carburettor*	1	

44	268 040	SEILEINHAENGUNGSSATZ THROTTLE CABLE FIXATION KIT	1
45	994 483	MIKUNI-PUMPE MIKUNI-FUEL PUMP	1
46	296 165	DICHTUNGSSATZ-BENZINPUMPE GASKET SET FUEL PUMP	1
47	297 122	GASSEILZUG KPL. CABLE BOWDEN ASSY. THROTTLE *Für Vergaser* *For carburettor*	1
48	274 161	KRAFTSTOFFFILTER MIT ROTAX-AUFDRUCK FUEL FILTER WITH ROTAX PRINT	1
49	260 260	ENTLUEFTUNGSSCHLAUCH 180 MM AIR VENT HOSE 180 MM	1
50	974 529	SCHLAUCH A5x8/2500 MM TUBE A5X8/2500 MM	1
51	570 910	SCHLAUCH 5X8MM 50M ROLLE ROTAX AUFDRUCK TUBE 5X8 MM / 50M ROLL ROTAX PRINTED *Optional*	
52	281 822	VERGASEREINSATZKIT 8,5 CARBURETOR INSERT KIT 8,5 *Optional*	1
53	281820	VERGASEREINSATZKIT 12,5 CARBURETOR INSERT KIT 12,5 *Standard*	1

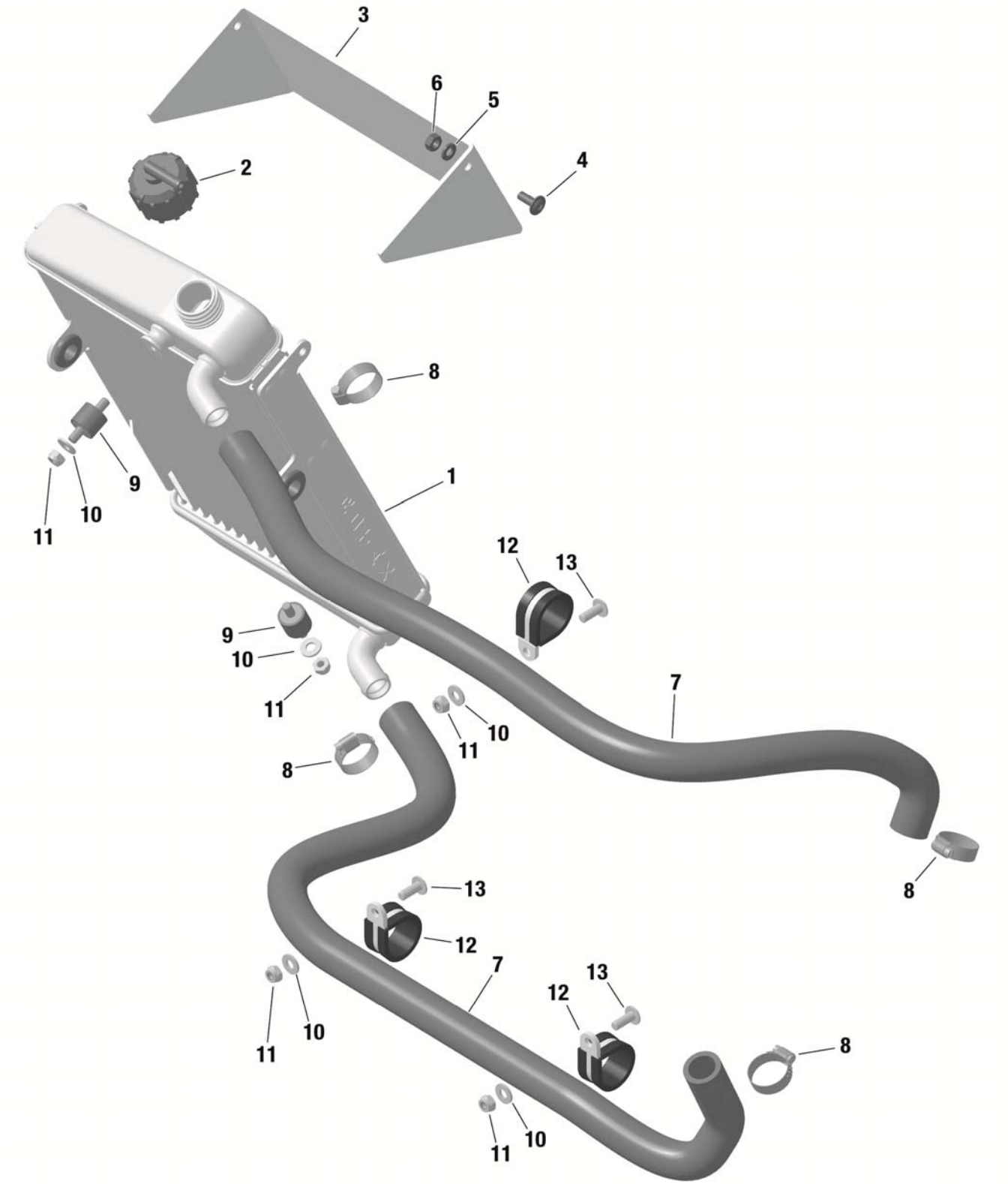
3
6
5
4
2
8
9
10
11
1
12
13
7

Chapter 10

KÜHLER, KÜHLERBEFESTIGUNG
RADIATOR, RADIATOR MOUNTING

BILD-NR. ILL.NO.	TEILE-NR. PART-NO.	BEZEICHNUNG DESCRIPTION	STÜCK QTY.	BARCODE BAR CODE
1-6	295 926	WASSERKUEHLER KPL. RADIATOR WITH CAP ASSY.	1	
2	222 750	KUEHLERVERSCHLUSS MIT DICHTUNG RADIATOR CAP WITH GASKET 1,0 BAR	1	
3	201 224	KUEHLERKLAPPE DD2 WINDSHIELD	1	
4	440 751	LINSENFLANSCHKOPFSCHRAUBE M6X16 ALLEN SCREW W. ROUNDED FLANGE HEAD M6X16	2	
5	244 211	SCHEIBE 6,4 DIN 134 WASHER 6,4 DIN 134	2	
6	842 040	SICHERUNGSMUTTER DIN 985-M6 LOCK NUT M6	2	
7	222 741	KUEHLWASSERSCHLAUCH DIN 73411-18/650 MM COOLING-WATER HOSE NW 18	2	
8	951 870	SCHNECKENGEWINDESCHELLE 16-25 CLAMP 16-25	4	
9	660 522	RUNDPUFFER 18X15XM6 RUBBER BUFFER 18X15XM6	3	
10	244 211	SCHEIBE 6,4 DIN 134 WASHER 6,4 DIN 134	6	
11	842 040	SICHERUNGSMUTTER DIN 985-M6 LOCK NUT M6	6	
12	251 430	ROHRSCHELLE 26/M6 CABLE CLAMP 26/M6	3	
13	440 751	LINSENFLANSCHKOPFSCHRAUBE M6X16 ALLEN SCREW W. ROUNDED FLANGE HEAD M6X16	3	

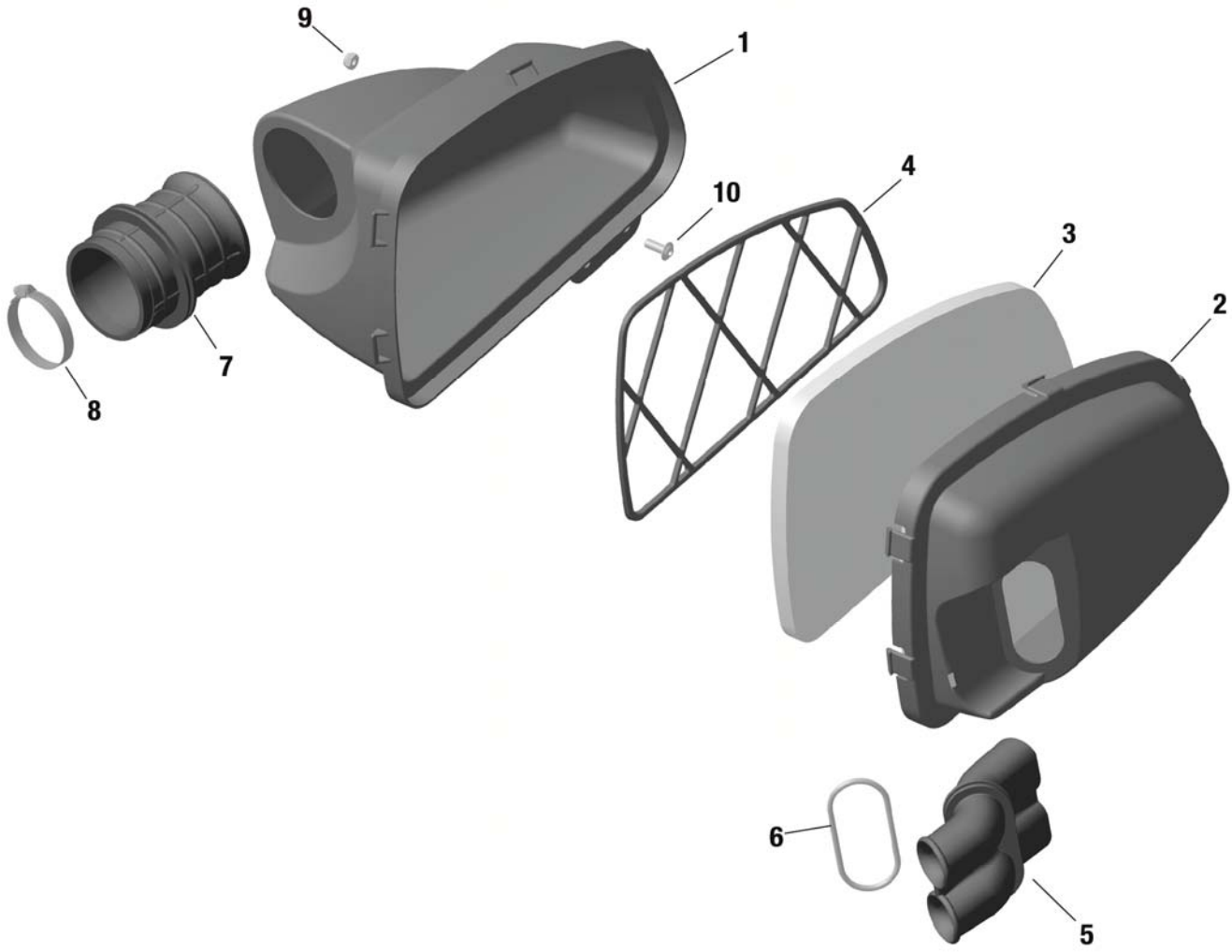
9
1
4
10
3
2
7
8
6
5

Chapter 11

ANSAUGGERÄUSCHDÄMPFER, DÄMPFERFILTER
INTAKE SILENCER, FILTER ELEMENT

BILD-NR. ILL.NO.	TEILE-NR. PART-NO.	BEZEICHNUNG DESCRIPTION	STÜCK QTY.	BARCODE BAR CODE
1	225 013	DAEMPFERGEHAEUSE INTAKE SILENCER CASE	1	
2	225 023	DAEMPFERDECKEL INTAKE SILENCER COVER	1	
3	225 054	DAEMPFERFILTER FILTER ELEMENT	1	
4	225 062	FILTERGITTER HOLDER FOR FILTER ELEMENT	1	
5	225 041	ANSAUGDAEMPFERROHR INTAKE SILENCER TUBE	1	
6	650 500	O-RING DIN 3771-59,52X2,62-N, NBR 70 O-RING DIN 3771-59,52X2,62-N, NBR 70 *O-Ring nur bei alterm Ansaugluftverteiler (225012 und 225022) notwendig* *O-Ring is only necessary for old airbox (225012 and 225022)*	1	
7	225 031	DAEMPFERSTUTZEN CARBURETOR SOCKET	1	
8	951 791	SCHNECKENGEWINDESCHELLE 50-70 CLAMP 50-70	1	
9	842 041	SICHERUNGSMUTTER DIN 985-M6 -6.6 LOCK NUT M6 - 6.6	1	
10	440 751	LINSENFLANSCHKOPFSCHRAUBE M6X16 ALLEN SCREW W. ROUNDED FLANGE HEAD M6X16	1	

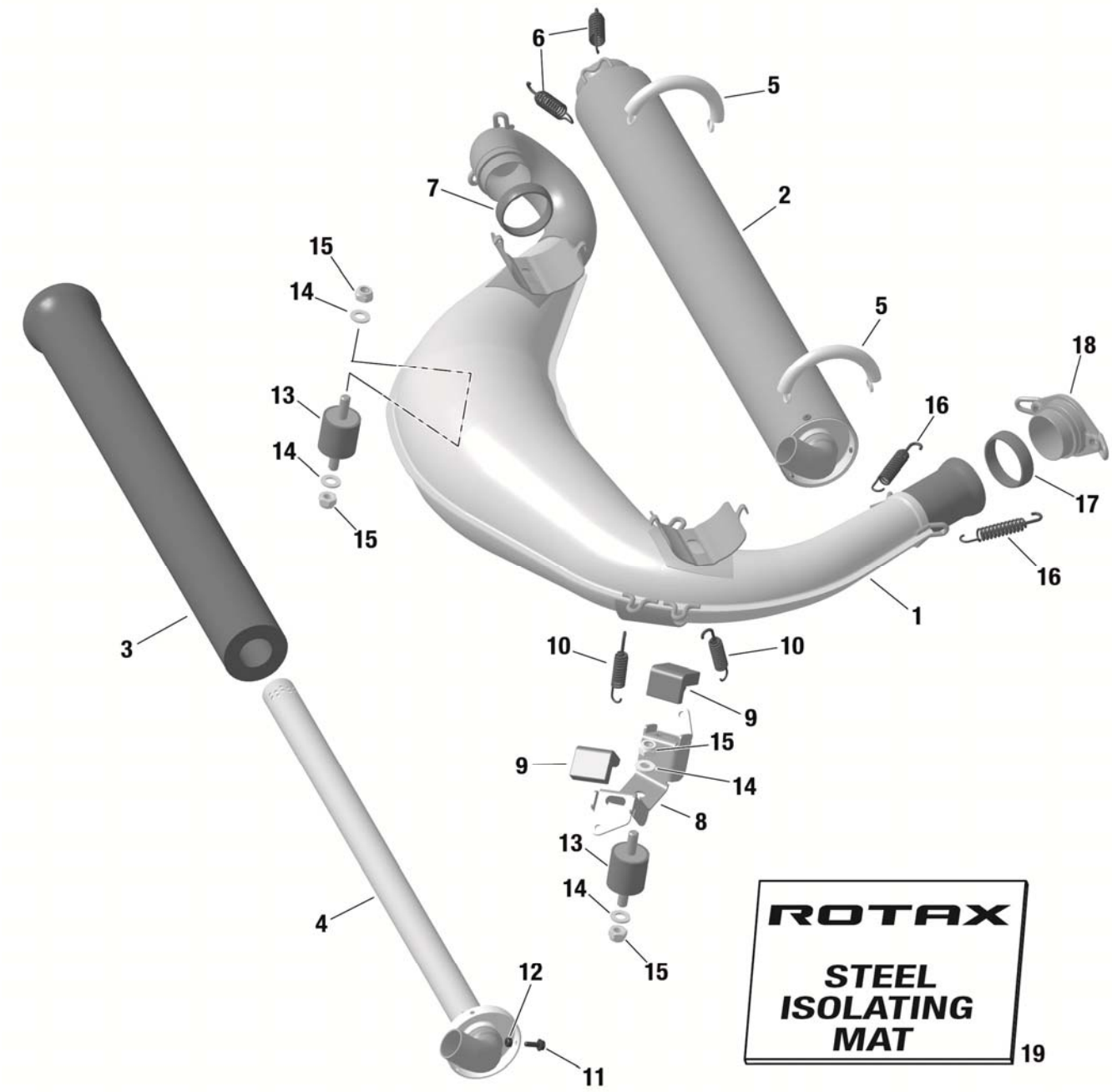
6
5
7
2
15
14
5
18
13
16
14
17
15
16
1
3
10
10
9
15
9
14
8
13
14
4
15
12
11
ROTAX
STEEL
ISOLATING
MAT
19

Chapter 12

AUSPUFFANLAGE
EXHAUST SYSTEM

BILD-NR. ILL.NO.	TEILE-NR. PART-NO.	BEZEICHNUNG DESCRIPTION	STÜCK QTY.	BARCODE BAR CODE
1-7	273 180	AUSPUFFANLAGE 125 MAX DD2 EVO EXHAUST SYSTEM 125 MAX DD2 EVO	1	
1	273 185	AUSPUFFTOPF KPL. 125 MAX DD2 EVO EXHAUST MUFFLER ASSY. 125 MAX DD2 EVO	1	
2-4	273 220	NACHDAEMPFER KPL. SILENCER ASSY.	1	
3	297 981	DAEMPFERMATTE ISOLATING MAT	1	
4	273 210	EINSCHUBROHR KPL. PERFORATED TUBE ASSY.	1	
5	238 945	ZUGFEDER TENSION SPRING	2	
6	938 798	ZUGFEDER EDELSTAHL SPRING STAINLESS	2	
7	450 360	AUSPUFFDICHTUNG EXHAUST GASKET	1	
8	651 075	HALTEBLECH RETAINING PLATE	1	
9	201 720	GUMMIPUFFER RUBBER BUFFER	2	
10	938 798	ZUGFEDER EDELSTAHL SPRING STAINLESS	2	
11	440 291	ZYL.SCHRAUBE M4X12 DIN 912 ALLEN SCREW M4X12 DIN 912 *Als Ersatz für Nieten im Reparaturfall* *As replacement for rivets in case of repair*	3	
12	242 533	SICHERUNGSMUTTER M4 LOCK NUT M4 *Als Ersatz für Nieten im Reparaturfall* *As replacement for rivets in case of repair*	3	
13	660 920	RUNDPUFFER 30X30XM8 RUBBER BUFFER 30X30XM8	2	

14	250 313	SCHEIBE 8,4 DIN 125 WASHER 8,4 STAINLESS STEEL	4	
15	942 030	SICHERUNGSMUTTER DIN 985-M8 LOCK NUT M8	4	
16	938 798	ZUGFEDER EDELSTAHL SPRING STAINLESS	2	
17	450 360	AUSPUFFDICHTUNG EXHAUST GASKET	1	
18	xxx	AUSPUFFSTUTZEN EXHAUST SOCKET ASSY. *Siehe Kap. 2, Pos. 30* *See chap. 2, Pos. 30*	1	
19	297 983	DAEMPFERMATTE STAHL MIT BANDKLAMMER ISOLATING MAT STEEL WITH TIE WRAP	N.B. As Req.	

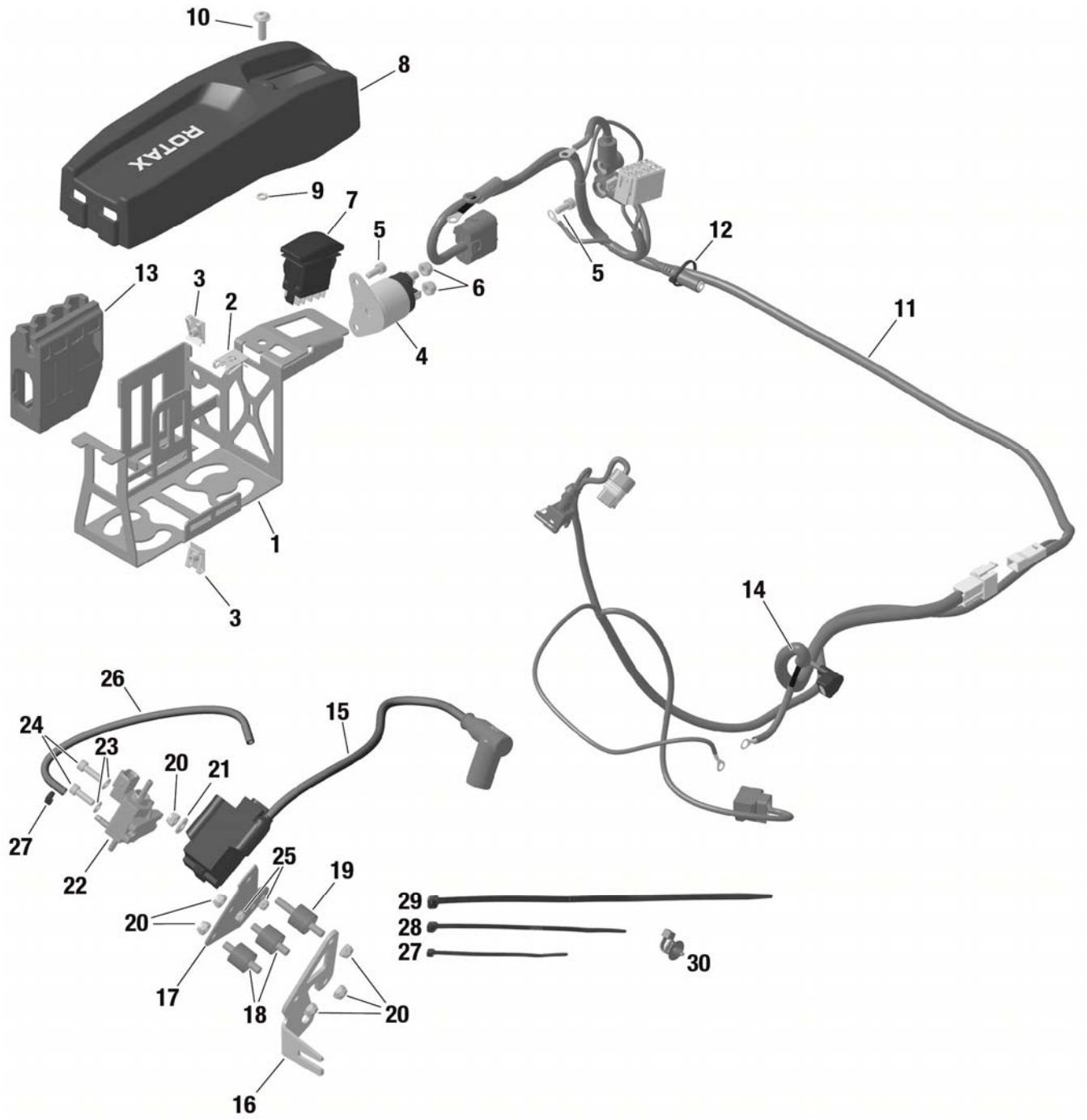
10
8
ROTAX
9
7
5
6
12
5
13
3
2
4
11
1
3
14
26
24
23
20
21
15
27
22
25
19
20
29
28
27
30
17
18
20
16

Chapter 13

EVO AUFRÜSTSATZ ZÜNDUNG
EVO UPGRADE KIT IGNITION

BILD-NR. ILL.NO.	TEILE-NR. PART-NO.	BEZEICHNUNG DESCRIPTION	STÜCK QTY.	BARCODE BAR CODE
1-13	251 124	BATTERIEHALTER EVO KPL. BATTERY CLAMP EVO ASSY.	1	
14	265 532	STARTERKABEL KPL. CABLE ASSY.	1	
15	666 825	ZUENDSPULE IGNITION COIL	1	
16	651 067	HALTEBLECH RETAINING PLATE	1	
17	651 925	TRAEGERPLATTE MOUNTING PLATE	1	
18	660 522	RUNDPUFFER 18X15XM6 RUBBER BUFFER 18X15XM6	2	
19	660 520	RUNDPUFFER 18X15XM6 RUBBER BUFFER 18X15XM6	1	
20	842 041	SICHERUNGSMUTTER DIN 985-M6 -6.6 LOCK NUT M6 - 6.6	6	
21	244 211	SCHEIBE 6,4 DIN 134 WASHER 6,4 DIN 134	1	
22-27	xxx	Im Satz 481260 enthalten Included in kit 481260		
27	866 718	KABELBINDER 94X2,5 MM TIE WRAP 94x2,5 MM	N.B. As Req.	
28	866 714	KABELBINDER 142X3,2 MM TIE WRAP 142x3,2 MM	N.B. As Req.	
29	651 397	KABELBINDER 250X4,8 MM TIE WRAP 250X4,8 MM	N.B. As Req.	
30	951 341	KABELBINDER MIT HALTER 202X4,6 TIE WRAP WITH MOUNT 202X4,6	N.B. As Req.	

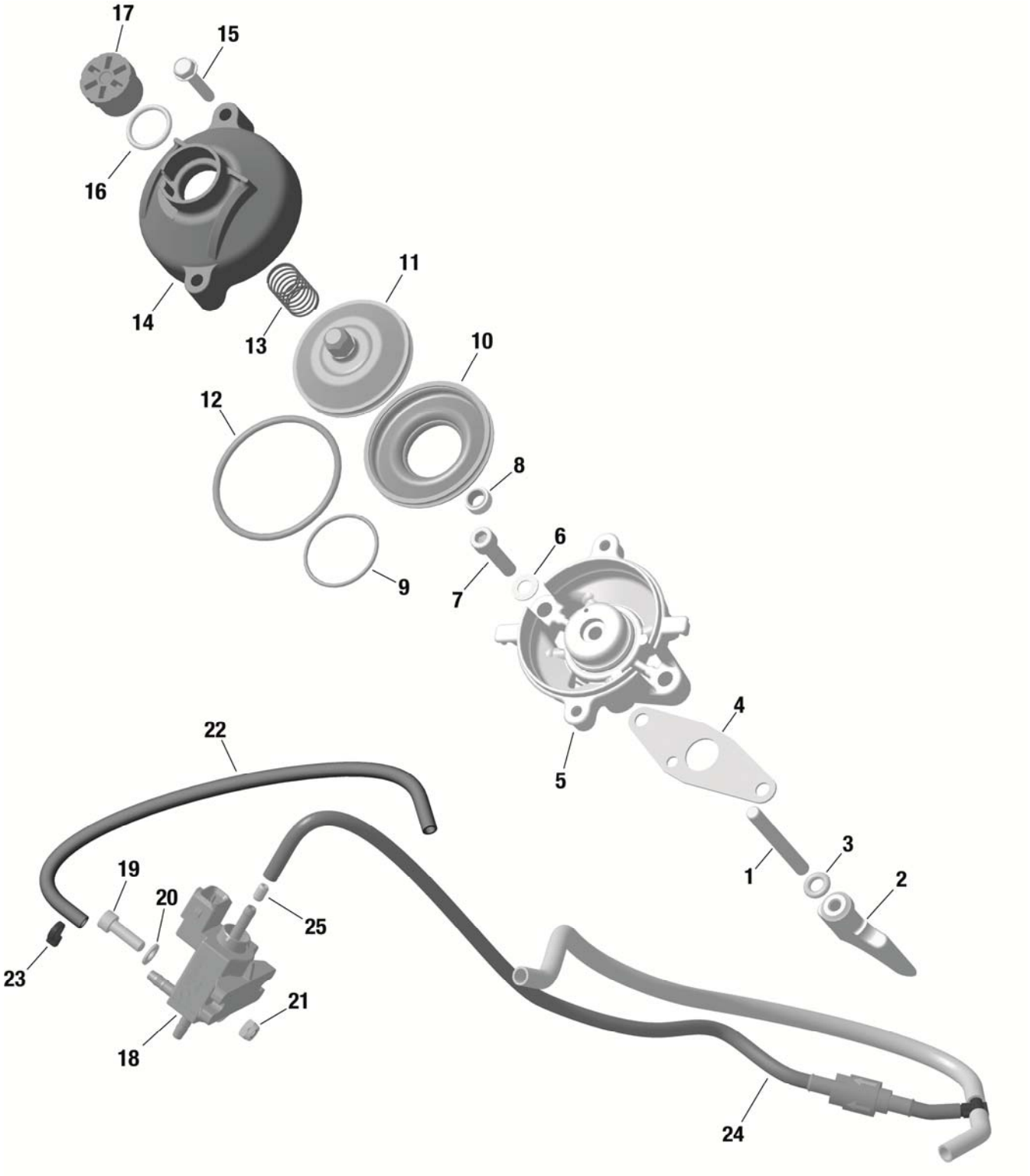
17
15
16
14
13
11
10
12
8
9
7
6
5
4
22
1
3
2
19
20
25
23
21
18
24

Chapter 14

EVO AUFRUESTSATZ E-AUSPUFFSCHIEBER
EVO UPGRADE KIT E-EXHAUST VALVE

BILD-NR. ILL.NO.	TEILE-NR. PART-NO.	BEZEICHNUNG DESCRIPTION	STÜCK QTY.	BARCODE BAR CODE
1-25	481 260	EVO AUFRUESTSATZ E-AUSPUFFSCHIEBER EVO UPGRADE KIT E-EXHAUST VALVE	1	
1	441 357	STIFTSCHRAUBE M6X52,5 STUD M6X52,5	1	
2	253 725	AUSLASSSCHIEBER EXHAUST VALVE	1	
3	230 260	O-RING DIN 3771-6X3-N, NBR 70 O-RING 6X3	1	
4	250 231	DICHTUNG GASKET	1	
5	253 385	SCHIEBERSTANGENFUEHRUNG KPL. VALVE ROD HOUSING KPL.	1	
6	845 020	FEDERSCHEIBE B6 DIN 137 SPRING WASHER B6	2	
7	840 861	ZYL.SCHRAUBE M6X25 DIN 912 ALLEN SCREW M6X25 DIN 912	2	
8	930 500	WD-RING AOF 6X11X3/4,5 NBR OIL SEAL 6X11X3/4,5	1	
9	838 255	SCHLAUCHFEDER 70-1,7-0,3 HOSE SPRING 70-1,7-0,3	1	
10	260 723	SCHIEBERBALG BELLOW	1	
11	854 440	SCHIEBERKOLBEN EXHAUST VALVE PISTON	1	
12	939 280	SCHLAUCHFEDER 134-3,0-0,65 HOSE SPRING 134-3,0-0,65	1	
13	239 952	DRUCKFEDER DM13,2 D0,8 L48,5 COMPRESSION SPRING 48,5/0,8 MM	1	

14	911 559	SCHIEBERABDECKUNG VALVE COVER	1	
15	241 270	TAPTITE-SCHRAUBE M5X25 TAPTITE-SCREW M5X25	2	
16	430 220	O-RING DIN 3771-15,9X2,3-N, NBR 70 O-RING 15,9-2,3	1	
17	241 220	EINSTELLSCHRAUBE ADJUSTMENT SCREW	1	
18	664 630	MAGNETVENTIL SOLENOID VALVE	1	
19	840 514	ZYL.SCHRAUBE ISO 4762 - M5x16 - 8.8 ALLEN SCREW ISO 4762 - M5x16 - 8.8	2	
20	927 571	SCHEIBE 5,3 DIN 125 WASHER 5,3 -400	2	
21	842 030	SICHERUNGSMUTTER DIN 985-M5 LOCK NUT M5	2	
22	660 575	DRUCKLEITUNG 220 MM PRESSURE LINE 220 MM	1	
23	866 718	KABELBINDER 94X2,5 MM TIE WRAP 94x2,5 MM	1	
24-25	651 010	SCHLAUCHPAKET RAVE STEUERUNG HOSE PACKAGE RAVE CONTROL UNIT	1	
25	956 305	IMPULSDROSSEL IMPULSE NOZZLE	1	

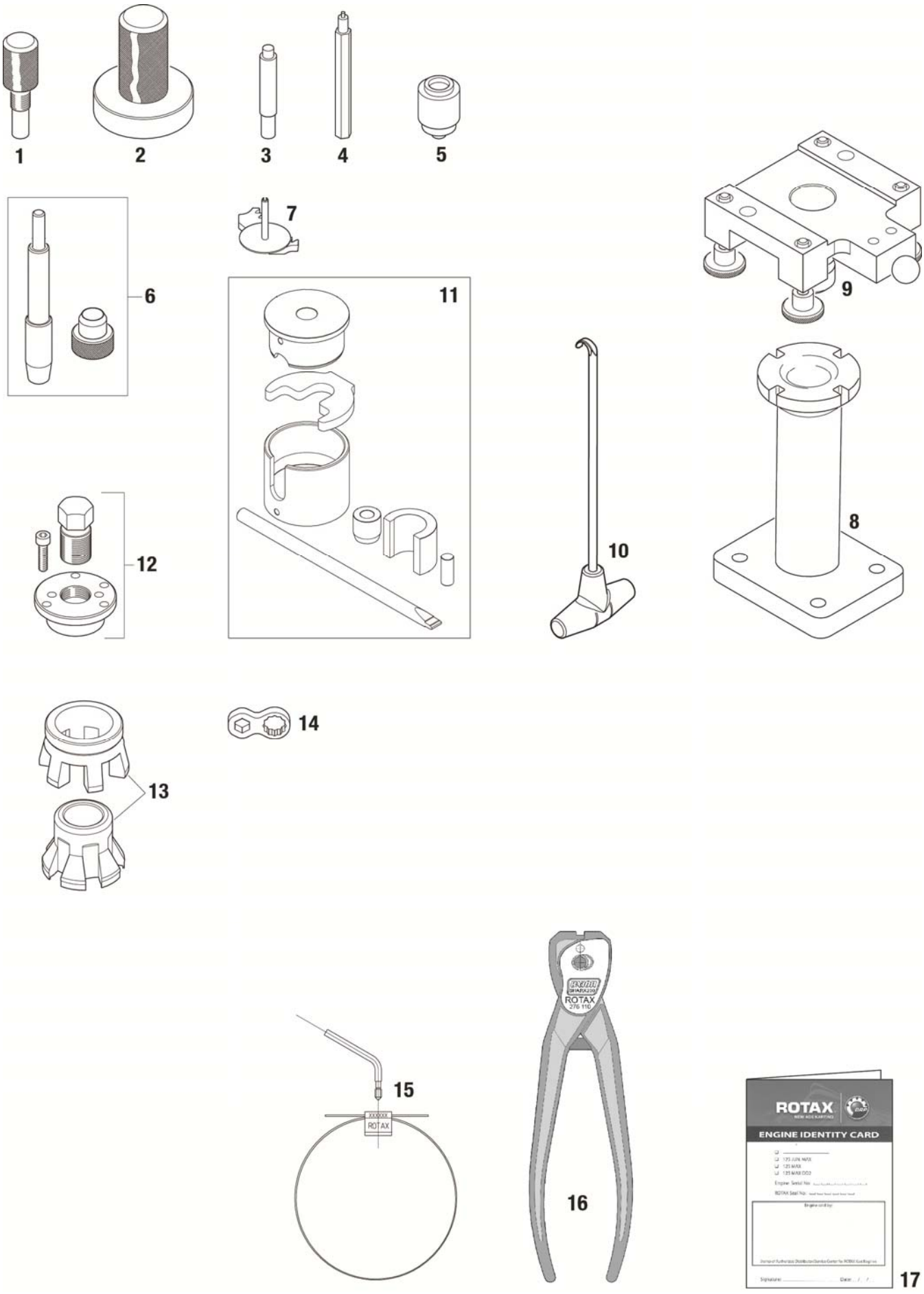
1
2
3
4
5
6
7
8
9
10
11
12
13
14
15
ROTAX
16
ROTAX
ENGINE IDENTITY CARD
17

Chapter 15

WERKZEUGE
REPAIR TOOLS

BILD-NR. ILL.NO.	TEILE-NR. PART-NO.	BEZEICHNUNG DESCRIPTION	STÜCK QTY.	BARCODE BAR CODE
1	277 381	BLOCKIERDORN FIXATION TOOL FOR CRANKSHAFT *Zum Blockieren der Kurbelwelle* *For blocking the crankshaft*	1	
2	676 022	MONTAGEDORN INSERTION JIG *Für WD-Ring der Hohlwelle* *For oil seal of hollow shaft*	1	
3	676 030	MONTAGEDORN INSERTION JIG *Für Nadelhülse des E-Starters* *For needle bushing of E-starter*	1	
4	676 032	MONTAGEDORN INSERTION JIG *Für Spannhülse des Wasserpumpenlaufrades* *For slotted spring pin of waterpump impeller*	1	
5	676 021	MONTAGEDORN INSERTION JIG *Für Wellendichtringe der Wasserpumpe* *For oil seals of waterpump shaft*	1	
6	676 035	MONTAGEDORN INSERTION TOOL *Zur Montage der Kolbenbolzensicherungen* *For installation of piston pin circlips*	1	
7	676 202	FIXIERWERKZEUG KPL. DD2 FIXATION TOOL ASSY. DD2 *Zum Blockieren des Starterzahnkranzes* *For blocking the starter gear* *Für Motorausführungsnr. Diecast* *For engine version no. Diecast*	1	
8	877 930	LAGERBOCK TRESTLE SUPPORT	1	
9	676 052	MONTAGEPLATTE FIXING PLATE FOR ENGINE *Für ROTAX Motoren Type FR 125 MAX / 125 MAX DD2* *For ROTAX engine types FR 125 MAX / 125 MAX DD2*	1	

10	251 680	FEDERHAKEN SPRING HOOK *Für Auspufffedern* *For exhaust springs*	1
11	276 051	KURBELWELLEN-REPARATURVORRICHTUNG CRANKSHAFT REPAIR JIG	1
12	276 016	ROTORABZIEHER KPL. PULLER ASSY.	1
13	276 070	MONTAGEWERKZEUG SCHIEBERBALGFEDER ASSEMBLY TOOL BELLOW SPRING EXHAUST V.	1
14	676 110	SCHLUESSELAUFSATZ SW11/SW8 ZYLINDER WRENCH ADAPTER 11/8 CYLINDER	1
15	297 041	ROTAX-SIEGEL MIT BARCODE ROTAX-SEAL WITH BAR CODE *Mit registrierter Serialnummer* *Nur für autorisierte Vertriebspartner* *With registered serial no.* *For authorised distributors only*	1
16	276 110	ROTAX SIEGEL-ZANGE ROTAX SEAL CALLIPER *Nur für autorisierte Vertriebspartner* *For authorised distributors only*	1
17	297 240	MOTORPASS ENGINE IDENTITY CARD *Nur für autorisierte Vertriebspartner* *For authorised distributors only*	1

FR 125 MAX

1

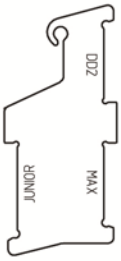
DDZ
JUNIOR
MAX

2

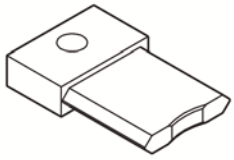

3

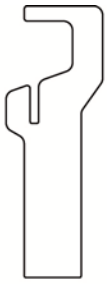

4

ROTAX.
Tin Wire
3 mm/100gr

5

ROTAX.
Tin Wire
2 mm/100gr

6

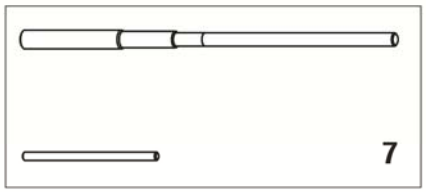

7

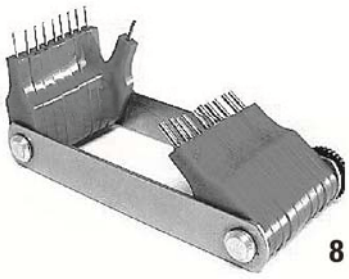

8

KART ECU TESTER
ROTAX.
AMP

9

Chapter 16

PRÜFWERKZEUGE
SCRUTINEERING TOOLS

BILD-NR. ILL.NO.	TEILE-NR. PART-NO.	BEZEICHNUNG DESCRIPTION	STÜCK QTY.	BARCODE BAR CODE
1	277390	KONTROLLLEHRE COMBUSTION CHAMBER INSERT TEMPLATE	1	
2	277397	KONTROLLLEHRE AUSPUFFKANALHOEHE EXHAUST PORT HEIGHT TEMPLATE	1	
3	277030	AUSPUFFSCHIEBERLEHRE EXHAUST VALVE GAUGE	1	
4	277400	KONTROLLLEHRE VERGASER VHSB34 CONTROL TEMPLATE CARBURETOR VHSB34	1	
5	580132	LOETDRAHT 3 MM-100 GR TIN WIRE 3 MM-100 GR	1	
6	580130	LOETDRAHT 2 MM-100 GR TIN WIRE 2 MM-100 GR	1	
7	676034	EINPRESSDORN VENTURI FITTING MANDREL VENTURI	1	
8	281920	DUESENLEHRENSATZ 0,45 - 1,50 MM JET GAUGE SET 0,45 - 1,50 MM	1	
9	276 230	ECU TESTER ECU TESTER *Für Dellorto ECU* *For Dellorto ECU*	1	

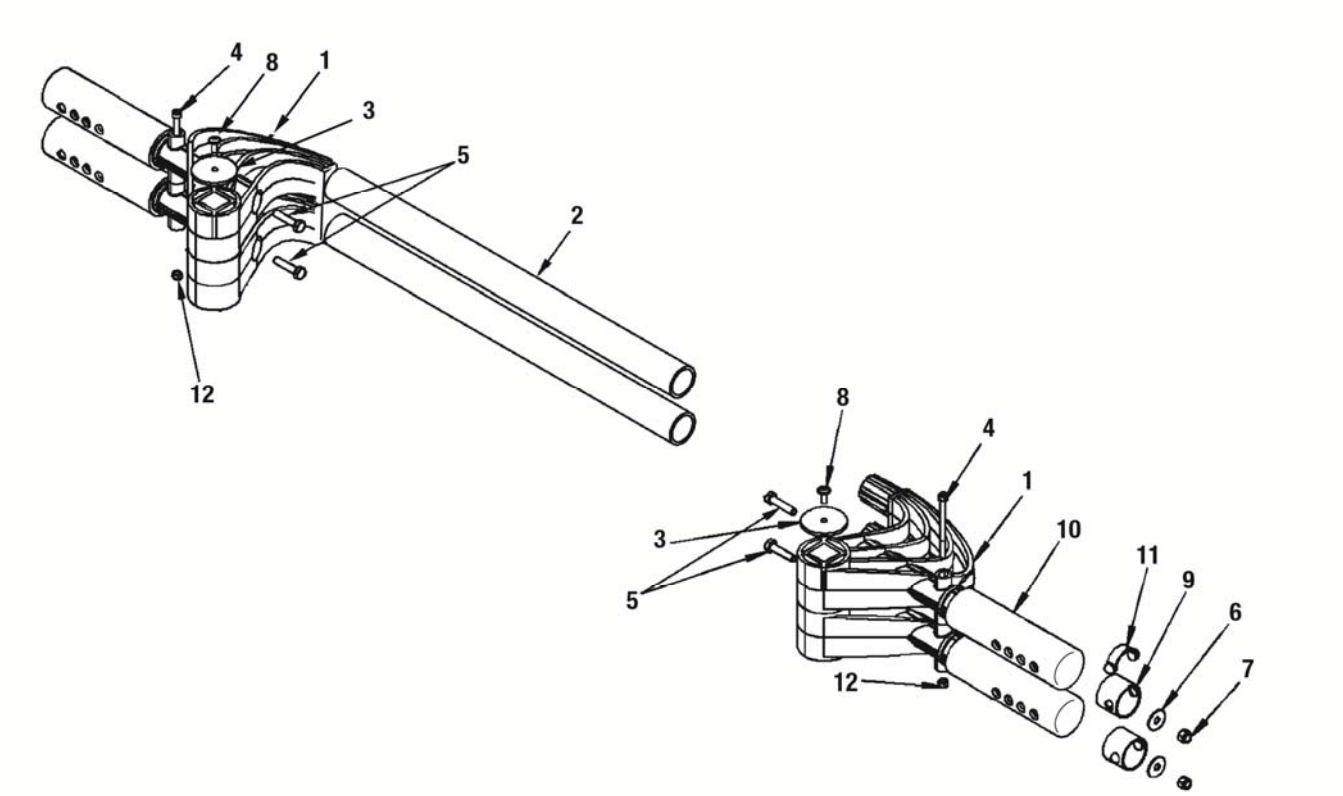
4
8
1
3
5
2
12
8
4
1
3
10
11
9
6
7
5
12

Chapter 17

HINTERREIFEN SICHERHEITS SYSTEM
REAR TIRE PROTECTION SYSTEM

BILD-NR. ILL.NO.	TEILE-NR. PART-NO.	BEZEICHNUNG DESCRIPTION	STÜCK QTY.	BARCODE BAR CODE
1-12	281 570	AUFFAHRSCHUTZ RTPS KPL. MOD.05 REAR TIRE PROTECTION SYSTEM ASSY. MOD.05	1	
1	660 600	STOSSFAENGER REAR BUMPER	4	
2	570 060	STOSSFAENGERROHR 40X3,7X556 REAR FENDER TUBE 40X3,7X550	2	
3	570 120	DISTANZSCHEIBE 52X4 DISTANCE WASHER 52X4	2	
4	241 501	ZYL.SCHRAUBE M6X80 DIN 912 ALLEN SCREW M6X80 DIN 912	2	
5	241 341	SK-SCHRAUBE M8X35 DIN 933 HEX. SCREW M8X35 DIN 933	4	
6	627 960	SCHEIBE 8/25/1,8 WASHER 8/25/1,8	4	
7	942 030	SICHERUNGSMUTTER DIN 985-M8 LOCK NUT M8	4	
8	440 751	LINSENFLANSCHKOPFSCHRAUBE M6X16 ALLEN SCREW W. ROUNDED FLANGE HEAD M6X16	2	
9	233 130	GLEITHUELSE ANTIFRICTION BUSHING	4	
10	570 056	ANLAUFROLLE 50X4,6X178 TYRE PROTECTION ROLLER 50X4,6X178	4	
11	570 080	FEDERELEMENT SPRING ELEMENT	4	
12	842 040	SICHERUNGSMUTTER DIN 985-M6 LOCK NUT M6	4	

Hourmeter
ROTAX
RUN
TOTAL

2

ROTAX
ON
MEM

1

3

4

5

6

ROTAX

ROTAX
ROTAX

7

8

ROTAX
KARTING
BRP
PART NUMBER: 282830
ROTAX
KARTING
BRP
ROTAX
MAX
CHALLENGE

Chapter 18

ZUBEHÖR
ACCESSORIES

BILD-NR. ILL.NO.	TEILE-NR. PART-NO.	BEZEICHNUNG DESCRIPTION	STÜCK QTY.	BARCODE BAR CODE
1	276 101	REIFENDRUCKMESSGERAET DIGITAL DIGITAL TIRE PRESSURE GAUGE	1	
2	581 381	STUNDENZAEHLER DIGITAL ROTAX DIGITAL HOURMETER ROTAX	1	
3	581 385	SPRITZE 60 ML SYRINGE 60 ML	1	
4	240 184	ZYL.SCHRAUBE M5X20 ALLEN SCREW M5X20	1	
5	261 552	DUESENTASSE MAIN JET CUP	1	
6	276 220	DUESENHALTER ROTAX JET HOLDER ROTAX	1	
7	582 870	TRANSPORTKOFFER AL 440X360X425 MM FLIGHTCASE AL 440X360X425 MM	1	
8	282 880	FALTKARTON 430X362X295 INNEN FOLDABLE BOX 430X362X295 INSIDE	1	

ROTAX. BRP

XPS KART TEC®

FOR MAX PERFORMANCE

KART MAINTENANCE PRODUCTS

POWERED BY Xeramic TECHNOLOGY

XPS® KART TEC SYNMAX FULL SYNTHETIC 2T KART RACING OIL
Part No: 25470 Contents: 1 Ltr.

XPS® KART TEC SYNMAX 2 STROKE FULLY SYNTHETIC KART RACING OIL is the superior pre mix racing 2-stroke oil specially developed for ROTAX 125 MAX engine family. Official oil of the Rotax Max Challenge.

Formulated to provide:

- Outstanding lubricity under extreme conditions (high revolutions, high temperature)
- Optimum deposit control for a clean engine and exhaust valve
- Maximum power output without compromising component protection
- Easy to blend and long term stability in fuel/oil mixture

For ROTAX 125 MAX engines use mixing ratio of:
1:30 (3% oil) for break in
1:50 (2% oil) for optimum performance
For other engines follow mixing instruction of engine manufacturer.

XPS® KART TEC 2 STROKE SYNTHETIC OIL
Part No: 297461 Contents: 946 ml (1 U.S. QT)

XPS® KART TEC 2 STROKE SYNTHETIC OIL is the ultimate pre mix racing 2-stroke oil specially developed for 125 MAX engine family. Formulated to provide: High lubricity and optimum deposit control. Visible spark plug and piston colour for race tuning. Maximum power output. Easy to blend and long term stability in fuel/oil mixture. For ROTAX 125 MAX engines use mixing ratio of: 1:30 (3% oil) for break in 1:50 (2% oil) for optimum performance.

This product is not produced by Xeramic®

XPS® KART TEC DD2 KART GEAR OIL
Part No: 25474 Contents: 150 ml

XPS® KART TEC DD2 KART GEAR OIL is especially developed for the ROTAX MAX DD2 high performance kart engines. Reduces wear and is temperature resistant. For the correct dosage follow the engine manufacturer recommendations. We advise to change the XPS® KART TEC DD2 KART GEAR OIL every 5 working hours.

XPS® KART TEC KART GEAR OIL
Part No: 25113 Contents: 100 ml

XPS® KART TEC KART GEAR OIL is especially developed for the ROTAX MAX high performance kart engines. Reduces wear and is temperature resistant. For the correct dosage follow the engine manufacturer recommendations. Not suitable for kart engines with manual gearboxes! We advise to change the XPS® KART TEC KART GEAR OIL every 5 working hours.

XPS® KART TEC HELMET VISOR CLEANER
Part No: 25404 Contents: 200 ml

XPS® KART TEC VISOR CLEANER. For thoroughly and effective cleaning of the helmet visor. Removes greasy finger marks and squashed insects without a problem and gives a sparkling finish to the helmet visor. Shake can well before use and spray sparingly onto surface. Wipe of immediately and polish with a clean and dry cloth.

XPS® KART TEC BRAKE FLUID DOT 4
Part No: 25475 Contents: 250 ml

XPS® KART TEC BRAKE FLUID DOT 4 has been developed for use in all hydraulically operated brake and or clutch systems where a DOT 4 is specified.

XPS® KART TEC CARBURETTOR CLEANER
Part No: 25311 Contents: 500 ml

XPS® KART TEC CARBURETTOR CLEANER dissolves gum, carbon and varnish deposits quick and effectively without dismantling the carburettor. Does not affect plastic and rubber parts and is free of chlorinated hydrocarbons. Suitable for all different types of carburettors used in karting.

XPS® KART TEC BRAKE CLEANER
Part No: 25315 Contents: 500 ml

XPS® KART TEC BRAKE CLEANER. Biodegradable multi cleaner for the effective and environmentally safe cleaning of brake components etc. Contains no chlorinated hydrocarbons. Does not corrode plastic and rubber components. A versatile, high-grade cleaning agent that even dissolves resinified contamination.

XPS® KART TEC CERAMIC MULTI SPRAY
Part No: 25405 Contents: 500 ml

XPS® KART TEC CERAMIC MULTI SPRAY. General maintenance lubricant with high-tech ceramic material for optimal and long-life protection. The ceramic material resists high temperatures and lubricates under all extreme circumstances. It has excellent water-resistance, great penetrating characteristics and sticks to any surface. Protects against corrosion and preserves rubber parts. For lubrication and protection of bearings, ball bearings, cables etc.

XPS® KART TEC INSTANT GASKET BLACK
Part No: 25151 Contents: 200 ml

XPS® KART TEC INSTANT GASKET BLACK is designed for engines fitted with oxygen sensors. Ideal for replacement gaskets for valve covers, transmission and oil pans, water pumps, thermostat housings, asbestos, exhaust manifolds, thermostat housings and many more. Resists transmission fluids, water, oil and anti-freeze. Replaces cork, paper, felt and rubber gaskets. IMPORTANT: Not recommended for use on head gaskets or continuous immersion in gasoline. Withstands high temperatures up to 250°C (intermittent). Temperature range -73°C up to + 250°C. Low volatile, oxygen sensor safe.

XPS® KART TEC HANDCLEANER YELLOW
Part No.: 25423 Contents: 600 ml
Part No.: 25424 Contents: 4,5 ltr
Part No.: 25426 Contents: 3,8 ltr incl. pump

XPS® KART TEC HANDCLEANER YELLOW. Powerful citrus hand-cleaner for removing heavy duty industrial soiling. It's unique product formulation easily removes stubborn soiling like grease, tar, ink, adhesive and paint. Cleans and moisturises the hands and prevents skin irritation.

XPS® KART TEC SYNTHETIC CHAIN SPRAY

Part No: 25108 Contents: 500 ml

XPS® KART TEC SYNTHETIC CHAIN SPRAY is an advanced chain spray with long-life properties, based on ceramic material. This unique material, originally developed for use in space flight, has now been given a revolutionary application by XPS® KART TEC. XPS® KART TEC SYNTHETIC CHAIN SPRAY is composed of synthetic elements, enriched with ceramic material and special additives that result in a unique lubrication. XPS® KART TEC SYNTHETIC CHAIN SPRAY does not dry-out, it keeps the chain flexible and is heat-resistant. O-ring tested!

XPS® KART TEC WHITE CHAIN SPRAY

Part No: 25112 Contents: 500 ml

XPS® KART TEC WHITE CHAIN SPRAY. Based on high-tech ceramic material for optimal and long-term lubrication and protection under all circumstances. Great adhesive qualities, superb penetration, corrosion resistance, reduces wear and friction, keeps the chain flexible and is heat resistant. O-ring tested!

XPS® KART TEC KART CLEANER + PRESSURE SPRAYER

Part No: 25501 Contents: 5 Ltr.
Part No: 25935 Capacity: 1,5 Ltr

XPS® KART TEC KART CLEANER.
A highly concentrated and effective biodegradable alkaline cleaner with a unique formulation which removes dirt easily. Completely safe to use on aluminium, chrome, synthetic material, painted surfaces, plastic and rubber parts. In case of extreme soiling allow to work up to 30 minutes maximum before rinsing off thoroughly. XPS® KART TEC KART CLEANER leaves a complete all over shine.

ROTAX.

XPS® and the BRP Logo are trademarks of Bombardier Recreational Products Inc. or its affiliates.
WWW.BRP.COM - WWW.KART-ROTAX.COM

MANUFACTURED BY PETROMARK AUTOMOTIVE CHEMICALS BV - BEVERWIJK, THE NETHERLANDS
PHONE: +31 251 211 397 • FAX: +31 251 212 390 • MADE IN HOLLAND • WWW.XERAMIC.COM
PM XERAMIC® IS A REGISTERED TRADEMARK OF PETROMARK AUTOMOTIVE CHEMICALS BV

BRP-Rotax GmbH & Co KG | Rotaxstrasse 1 | 4623 Gunskirchen, Austria | T: +43 7246 601 0 | F: +43 7246 637 0
www.rotax.com | www.rotax-kart.com

® and TM are trademarks of BRP-Rotax GmbH & Co KG. © 2016 BRP-Rotax GmbH & Co KG. All rights reserved.